Manualslib.com - The Global Manuals Library

GOODWE STS SERIES USER MANUAL

Quick Links

Product Overview

Table of Contents

Table of Contents
Applicable Model
Target Audience
Symbol Definition
Updates
General Safety
Equipment Safety
Personnel Requirements
EU Declaration of Conformity
Product Overview
Application Scenarios
Operation Mode
Appearance
Parts
Dimension
Indicator Description
Nameplate
Check Before Receiving
Storage
Deliverables
Installation Requirements
Installation the Equipment
Moving the Equipment
Installing the STS

Safety Precaution
Connecting the PE cable
Connecting the AC Cable
Communication Connection
Check Before Power ON
Power On
Indicators
Power Off
Removing the Equipment
Disposing of the Inverter
Troubleshooting
Routine Maintenance
Other ManualsLib Projects

GOODWE

User Manual

Static Transfer Switch

STS Series

(STS200-80-10)

V1.0-2024-04-08

Copyright © GoodWe Technologies Co.,Ltd. 2023. All rights reserved.

No part of this manual can be reproduced or transmitted to the public platform in any form or by any means without the prior written authorization of GoodWe Technologies Co.,Ltd.

Trademarks

GOODWE and other GOODWE trademarks are trademarks of GoodWe Technologies Co.,Ltd. All other trademarks or registered trademarks mentioned are owned by their original owners.

NOTICE

The information in this user manual is subject to change due to product updates or other reasons. This manual cannot replace the product safety labels unless otherwise specified. All descriptions here are for guidance only. All descriptions here are for guidance only.

CONTENT

1 About This Manual 1

1.1 Applicable Model 1

1.2 Target Audience 1

1.3 Symbol Definition 1

1.4 Updates 1

2 Safety Precaution 2

2.1 General Safety 2

2.2 Equipment Safety 2

2.3 Personnel Requirements 3

2.4 EU Declaration of Conformity 3

3 Product Introduction 4

3.1 Product Overview 4

3.2 Application Scenarios 5

3.3 Operation Mode 7

3.4 Appearance 8

3.4.1 Parts 8

3.4.2 Dimension 9

3.4.3 Indicator Description 9

3.4.4 Nameplate 10

4 Check and Storage 11

4.1 Check Before Receiving 11

4.2 Storage 11

4.3 Deliverables 12

5 Installation 13

5.1 Installation Requirements 13

5.2 Installation the Equipment 16

5.2.1 Moving the Equipment 16

5.2.2 Installing the STS 16

6 Electrical Connection 18

6.1 Safety Precaution 18

6.2 Connecting the PE cable 18

6.3 Connecting the AC Cable 19

6.4 Communication Connection 21

7 Equipment Commissioning 22
7.1 Check Before Power ON 22
7.2 Power On 22
7.3 Indicators 23

8 Maintenance 24
8.1 Power Off 24
8.2 Removing the Equipment 25
8.3 Disposing of the Inverter 25
8.4 Troubleshooting 25
8.5 Routine Maintenance 25

9 Technical Parameters 26

1 About This Manual

This manual describes the product information, installation, electrical connection, commissioning, troubleshooting, and maintenance of the Static Transfer Switch(STS). Read through this manual before installing and operating the product. All the installers and users have to be familiar with the product features, functions, and safety precautions. This manual is subject to update without notice. For more product details and latest documents, visit https://en.goodwe.com/.

1.1 Applicable Model

This manual applies to the Static Transfer Switch(STS) with the model name of STS200-80-10.

1.2 Target Audience

This manual applies to trained and knowledgeable technical professionals. The technical personnel has to be familiar with the product, local standards, and electric systems.

1.3 Symbol Definition

Different levels of warning messages in this manual are defined as follows:

DANGER
Indicates a high-level hazard that, if not avoided, will result in death or serious injury
WARNING
Indicates a medium-level hazard that, if not avoided, could result in death or serious injury
CAUTION
Indicates a low-level hazard that, if not avoided, could result in minor or moderate injury
NOTICE
Highlights key information and supplements the texts. Or some skills and methods to solve product-related problems to save time.

1.4 Updates

The latest document contains all the updates made in earlier issues.

V1.0 10/31/2023

- First Issue.

2 Safety Precaution

Please strictly follow these safety instructions in the user manual during the operation

NOTICE

The System is designed and tested to strictly comply with related safety rules. Read and follow all the safety instructions and cautions before any operations. Improper operation might cause personal injury or property damage as the System are electrical equipment.

2.1 General Safety

NOTICE

- The information in this user manual is subject to change due to product updates or other reasons. This manual cannot replace the product safety labels unless otherwise specified. All descriptions here are for guidance only.
- Before installations, read through the user manual to learn about the product and the precautions.
- All operations should be performed by trained and knowledgeable technicians who are familiar with local standards and safety regulations
- Use insulating tools and wear personal protective equipment when operating the equipment to ensure personal safety. Wear anti-static gloves, cloths, and wrist strips when touching electronic devices to protect the equipment from damage.
- The manufacturer shall not be liable for equipment damage or personal injury if you do not follow the instructions. For more warranty details, please visit https://en.goodwe.com/warranty

2.2 Equipment Safety

WARNING

- The voltage and frequency at the connecting point should meet the on-grid requirements.
- Additional protective devices like circuit breakers or fuses are recommended on the AC side. Specification of the protective device should be at least 1.25 times the rated AC output rated current.
- Copper-core cable is recommended for AC cable.
- Terminals at the bottom of the equipment cannot bear much load. Otherwise, the terminals will be damaged.
- All labels and warning marks must be clear and distinct after the installation. Do not block, alter, or damage any label.
- Warning labels on the equipment are as follows.

	Potential risks exist. Wear proper PPE before any operations.	5min	Delayed discharge. Wait 5 minutes after power off until the components are completely discharged.
	High-temperature hazard. Do not touch the product under operation to avoid being burnt.		Do not dispose of the equipment as household waste. Discard the product in compliance with local laws and regulations, or send it back to the manufacturer.
	Read through the guide before working on this equipment.		CE marking
	RCM marking		Grounding point. Indicates the position for connecting the PE cable.

2.3 Personnel Requirements

NOTICE

- Personnel who install or maintain the equipment must be strictly trained, learn about safety precautions and correct operations.
- Only qualified professionals or trained personnel are allowed to install, operate, maintain, and replace the equipment or parts.

2.4 EU Declaration of Conformity

GoodWe Technologies Co., Ltd. hereby declares that the equipment with wireless communication modules sold in the European market meets the requirements of the following directives:

- Radio Equipment Directive 2014/53/EU (RED)
- Restrictions of Hazardous Substances Directive 2011/65/EU and (EU) 2015/863 (RoHS)
- Waste Electrical and Electronic Equipment 2012/19/EU
- Registration, Evaluation, Authorization and Restriction of Chemicals (EC) No 1907/2006 (REACH)

You can download the EU Declaration of Conformity on https://en.goodwe.com.

GoodWe Technologies Co., Ltd. hereby declares that the equipment without wireless communication modules sold in the European market meets the requirements of the following directives:

- Electromagnetic compatibility Directive 2014/30/EU (EMC)
- Electrical Apparatus Low Voltage Directive 2014/35/EU (LVD)
- Restrictions of Hazardous Substances Directive 2011/65/EU and (EU) 2015/863 (RoHS)
- Waste Electrical and Electronic Equipment 2012/19/EU
- Registration, Evaluation, Authorization and Restriction of Chemicals (EC) No 1907/2006 (REACH)

You can download the EU Declaration of Conformity on https://en.goodwe.com.

3 Product Introduction

3.1 Product Overview

Intended usage

STS static transfer switch applies to industrial and commercial energy storage systems. The system can control the on-grid and off-grid mode switch of inverter via the STS. When the grid fails, the inverter switches to the off-grid mode and supplies power to off-grid loads from PV power or batteries; when the grid resumes power supply, the inverter switches back to the on-grid status. The STS supports generators and high power load such as heat pumps and high-power motors; the power of a single motor shall be ≤ 5.5kVA.

Model Description

This manual applies to the Static Transfer Switch with the model name of STS200-80-10.

STS200-80-10

1 2 3 4

No.	Referring to	
1	Product type	STS: Static Transfer Switch
2	Current specification of the grid side	200: 200 A
3	Current specification of the inverter side	80: 80 A
4	Version Code	The first generation of Static Transfer Switch

Supported Grid Types

For the grid with neutral wire, the voltage between the neutral wire and the ground wire must be less than 10V.

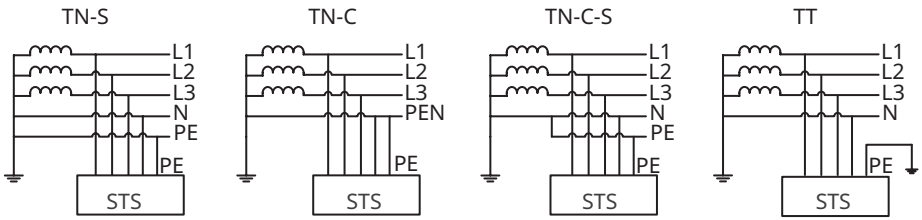

3.2 Application Scenarios

WARNING

- The PV system is not suitable to connect equipment that relies on a stable power supply, such as medical equipment to sustain life. Ensure that no personal injury is occurred when the system is disconnected.
- Avoid loads with high starting current like high-power water pumps in the PV system. Otherwise, the off-grid output may fail due to excessive instantaneous power.
- BACK-UP is not recommended if the PV system is not configured with batteries. Otherwise, it may cause system power outage.
- Factors such as: temperature, humidity, weather conditions, etc. may limit the battery's current and affect its load.
- The inverter paired with STS has a UPS-level on-grid and off-grid switching function, and the switching time is less than 20ms. Please ensure that the power of loads on the BACK-UP is less than the rated power of the inverter. Otherwise, it may cause function failure when the grid is power off.
- Commercial household loads can be supported when the inverter is paired with STS and is in off-grid mode. Accepted loads as below:
  - Inductive load: The power of a single device is ≤ 5.5 kVA, and multiple devices cannot be started at the same time.
  - Nonliner load: total power ≤ 0.66Pn. Pn indicates rated output power of the inverter.

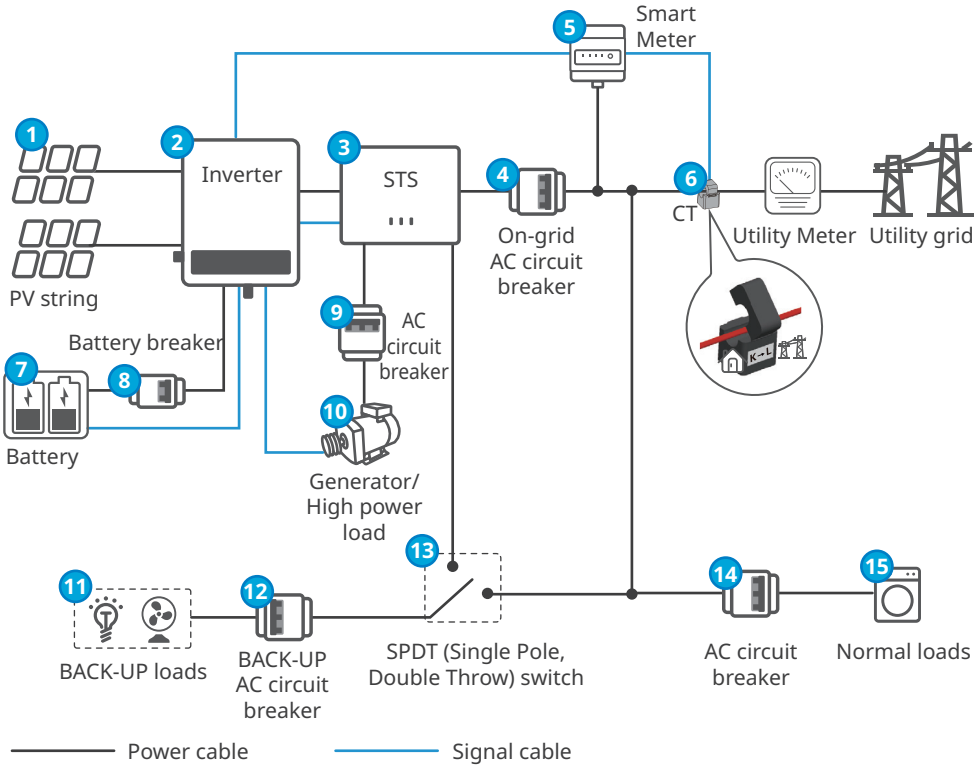

No.	Parts	Description
1	PV String	A PV string is composed of PV modules connected in series.
2	Inverter	Supports ET40 - 50 kW series inverters.
3	STS	Supports STS series static transfer switches.
4	On-grid AC circuit breaker	• Please prepare AC breaker by yourself • AC circuit breaker, recommended specifications: GW40K-ET-10: nominal voltage ≥ 400V, nominal current ≥ 80A GW50K-ET-10: nominal voltage ≥ 400V, nominal current ≥ 100A
5	Smart Meter	The smart meter is delivered with the inverter and the model can be GM330 or GM3000.
6	CT	• When using the GM330 smart meter, please select a CT according to recommendation in the smart meter manual. • When using the GM3000 smart meter, please use the CT delivered with the smart meter.
7	Battery	The battery used with the inverter shall be approved by the inverter manufacturer.

No.	Parts	Description
8	(Optional) Battery breaker	• Please prepare the battery breaker by yourself • Recommended specifications: nominal voltage ≥ 1000 Vdc, nominal current ≥ 125 A,
9	AC circuit breaker	Specification need to be determined based on actual load.
10	Generators or high power load	The inverter can control the start and stop of the generator connected to the STS or whether to supply power to high power load. Required specifications: Generator: voltage range 180~280V, frequency range 40~60Hz, power≤55kVA. High power load: power of single load ≤55kVA.
11	BACK-UP loads	• Supports connection of standby loads with a total power of no more than 50 kW, such as loads that require 24-hour power supply or other important loads. • Connecting unbalanced loads. Loads with different power can be connected to L1, L2, L3 of the inverter respectively. • Three-phase motor loads without N wires cannot be connected.
12	BACK-UP AC circuit breaker	• Please prepare AC breaker by yourself • AC circuit breaker, recommended specifications: GW40K-ET-10: nominal voltage ≥ 400V, nominal current ≥ 80A GW50K-ET-10: nominal voltage ≥ 400V, nominal current ≥ 100A
13	(Optional) SPDT (Single Pole, Double Throw) switch	• Please prepare the SPDT by yourself • To ensure that the loads on the BACK-UP port can continue to work when the STS is powered off for maintenance, it is recommended to install a SPDT switch. • SPDT, specification requirement: GW40K-ET-10: nominal voltage ≥ 400V, nominal current ≥ 80A GW50K-ET-10: nominal voltage ≥ 400V, nominal current ≥ 100A
14	AC circuit breaker	Specification need to be determined based on actual load.
15	Normal loads	The on-grid load can be connected according to actual needs.

3.3 Operation Mode

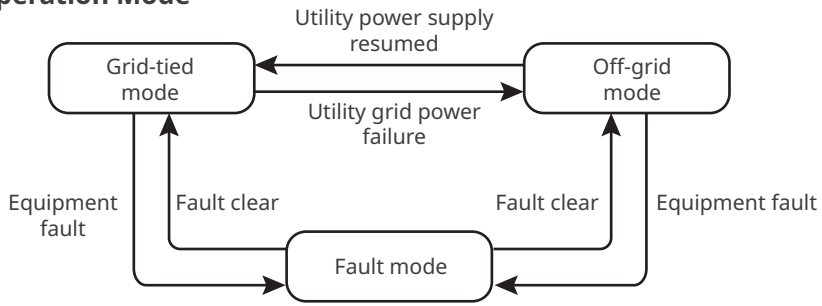

3.4 Appearance

3.4.1 Parts

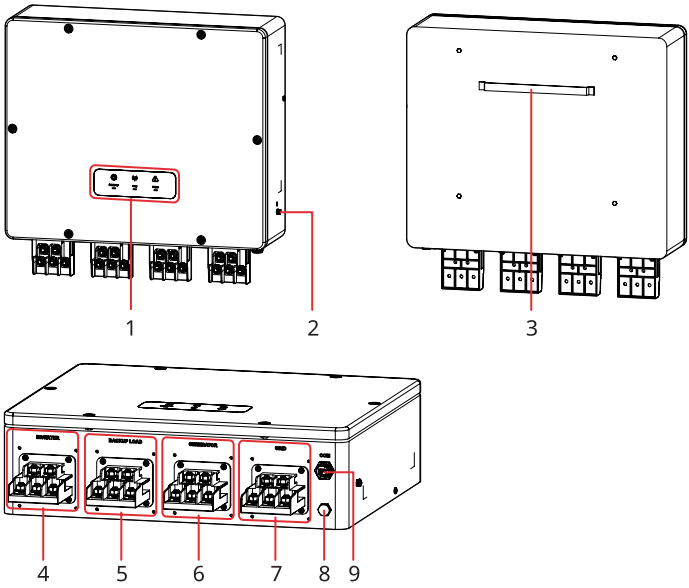

No.	Parts	Description
1	Indicator	Indicates working status of the STS.
2	PE terminal	Connects the grounding cable to the STS housing,
3	Mounting Plate	Mounting STS
4	Inverter AC terminal	Used to connect the AC Cable of a inverter
5	Backup load terminal	Used to connect the AC Cable of backup loads
6	Generator/High power load terminal	Used to connect the AC Cable of generators or high power load
7	Grid terminal	Used to connect the grid AC Cable
8	Ventilation valve	-
9	Communication port (COM)	Used to connect the communication cable of a inverter

3.4.2 Dimension

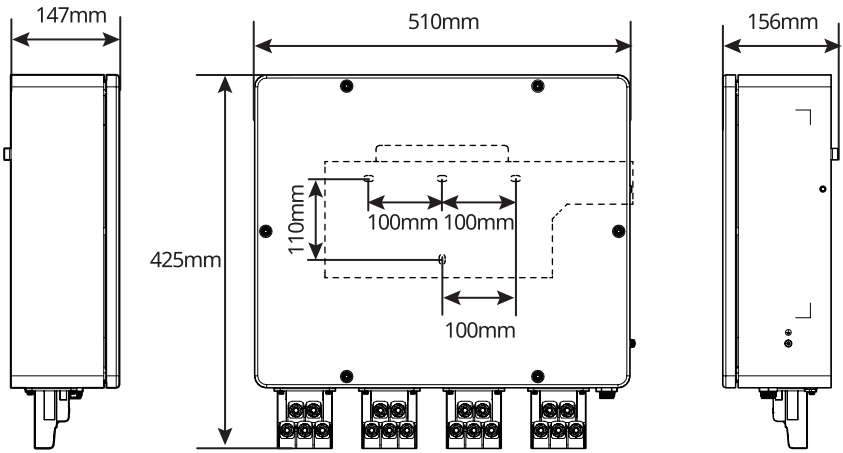

3.4.3 Indicator Description

Indicator	Status	Description
BACK-UP		The energy storage system is in the BACK-UP (off-grid) mode.
		The energy storage system is in the ON- GRID (on-grid) mode.
		The energy storage system is in the waiting status.
COM		The power supply of STS is normal and its communication with the inverter is normal.
		The power supply of STS is normal and its communication with the inverter fails.
		The power supply of STS fails and its communication with the inverter fails.
FAULT		A fault has occurred.
		No fault has occurred.

3.4.4 Nameplate

The nameplate is for reference only.

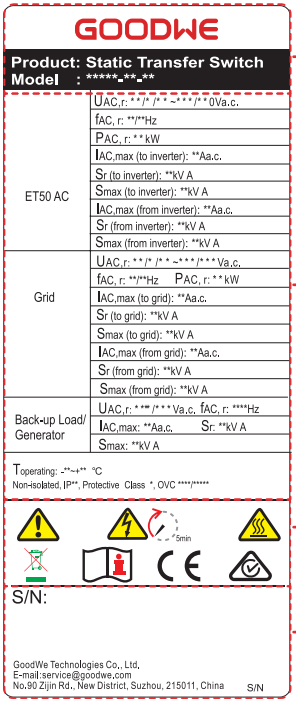

4 Check and Storage

4.1 Check Before Receiving

Check the following items before receiving the product.

1. Check the outer packing box for damage, such as holes, cracks, deformation, and other signs of equipment damage. Do not unpack the package and contact the supplier as soon as possible if any damage is found.
2. Check the STS model. If the inverter model is not what you requested, do not unpack the product and contact the supplier.
3. Check the deliverables for correct model, complete contents, and intact appearance. Contact the supplier as soon as possible if any damage is found.

4.2 Storage

If the equipment is not to be installed or used immediately, please ensure that the storage environment meets the following requirements:

1. Do not unpack the outer package or throw the desiccant away.
2. Store the equipment in a clean place. Make sure the temperature and humidity are appropriate and no condensation.
3. The height and direction of the stacked STS should follow the instructions on the packing box.
4. The STS must be stacked with caution to prevent them from falling.
5. If the STS has been long term stored, it should be checked by professionals before being put into use.

4.3 Deliverables

WARNING

Connect the DC cables with the delivered terminals. The manufacturer shall not be liable for the damage if other terminals are used.
[1] : The delivered AC OT terminals are suitable for circuits with a current of less than 90A. If you need to use OT terminals in circuits with a current of 90A to 200A, please contact dealers or after-sales service to obtain corresponding terminals.
[2] : The standard length of the inverter communication cable is 10m. If it needs to be extended, you can communicate with dealer to choose an extended one. The maximum length of communication cable is 100m.

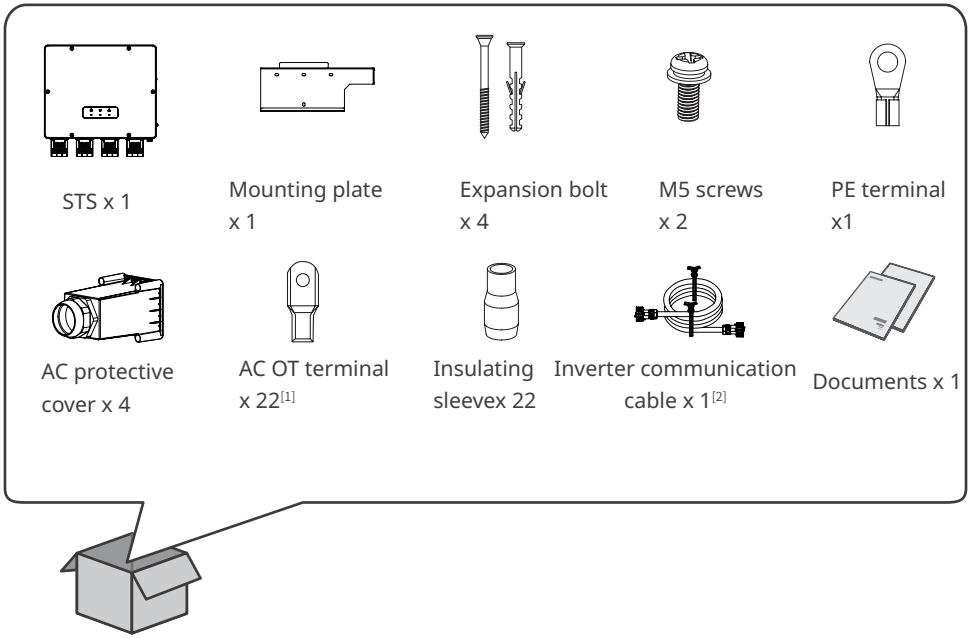

5 Installation

5.1 Installation Requirements

Installation Environment Requirements

1. Do not install the equipment in a place near flammable, explosive, or corrosive materials.
2. Do not install the equipment in a place that is easy to touch, especially within children's reach. High temperature exists when the equipment is working. Do not touch the surface to avoid burning.
3. Avoid the water pipes and cables buried in the wall when drilling holes.
4. Install the equipment in a sheltered place to avoid direct sunlight, rain, and snow. Build a sunshade if it is needed.
5. The place to install the equipment shall be well-ventilated for heat dissipation and large enough for operations.
6. The equipment with a high ingress protection rating can be installed indoors or outdoors. The temperature and humidity at the installation site should be within the appropriate range.
7. Install the equipment at a height that is convenient for operation and maintenance, ensure that the equipment's indicator lights, all labels are easy to view, and the wiring terminals are easy to operate.
8. The altitude to install the equipment shall be lower than the maximum working altitude 4000m.
9. Install the equipment away from electromagnetic interference. If there is any radio or wireless communication equipment below 30MHz near the equipment, you have to:
   - Add a multi-turn winding ferrite core at the AC output line of the equipment, or add a low-pass EMI filter.
   - Install the equipment at least 30 m far away from the wireless equipment.

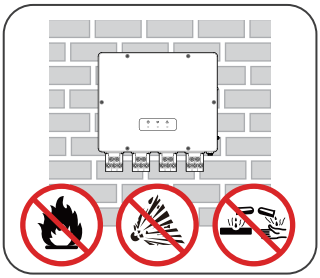

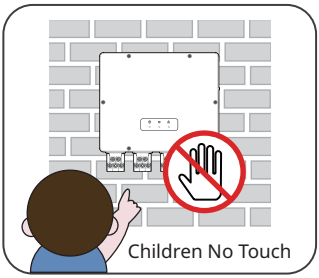

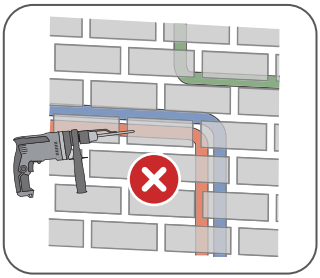

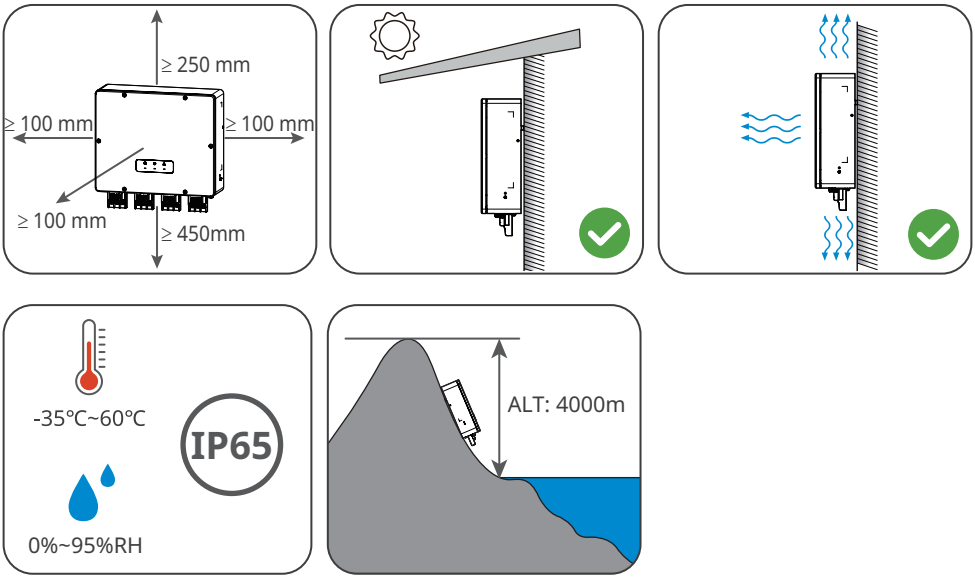

Mounting Support Requirements

- The mounting support shall be nonflammable and fireproof.
- Install the equipment on a surface that is solid enough to bear the equipment weight.
- Do not install the product on the support with poor sound insulation to avoid the noise bothering people nearby.

Installation Angle Requirements

- Install the equipment vertically or at a maximum back tilt of 15 degrees.
- Do not install the equipment upside down, forward tilt, back forward tilt, or horizontally.

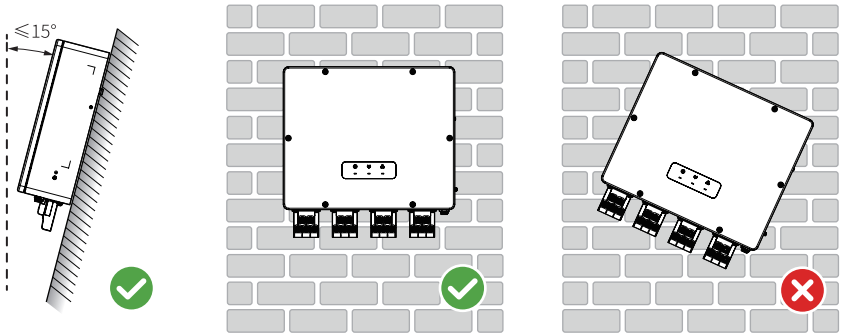

Installation Tool Requirements

The following tools are recommended when installing the equipment. Use other auxiliary tools on site if necessary.

Goggles

Safety shoes

Safety gloves

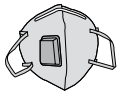
Dust mask

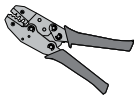
Crimping pliers

Diagonal pliers

Wire stripper

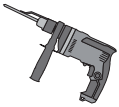
Hammer drill

Heat gun

Vacuum cleaner

Marker

Level

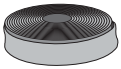
Heat shrink tube

Rubber hammer

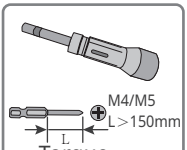

Torque screwdriver

Multimeter

Cable tie

Cable cutter

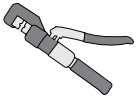
Hydraulic pliers YQK-70

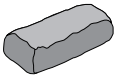
Fireproofing mud

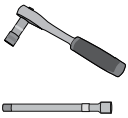
Socket wrench &Extension bar

5.2 Installation the Equipment

5.2.1 Moving the Equipment

CAUTION

- Operations such as transportation, shipment, installation and so on shall in compliance withthe laws and regulations of the country or region where the inverter is located.
- Move the equipment to the site before installation. Follow the instructions below to avoid personal injury or equipment damage.
  1. Consider the weight of the equipment before moving it. Assign enough personnel to move the equipment to avoid personal injury.
  2. Wear safety gloves to avoid personal injury.
  3. Keep balance to avoid falling down when moving the equipment.

5.2.2 Installing the STS

NOTICE

- Avoid the water pipes and cables buried in the wall when drilling holes.
- Wear goggles and a dust mask to prevent the dust from being inhaled or contacting eyes when drilling holes.
- Make sure the equipment is firmly installed in case of falling down.

Step 1: Put the plate on the wall horizontally and mark positions for drilling holes.

Step 2: Drill holes to a depth of 80mm using the hammer drill. The diameter of the drill bit should be ≤ 8 mm.

Step 3: Use the expansion bolts to fix the plate on the wall.

Step 4: Install the STS on the mounting plate.

Step 5: Secure the mounting plate and the STS.

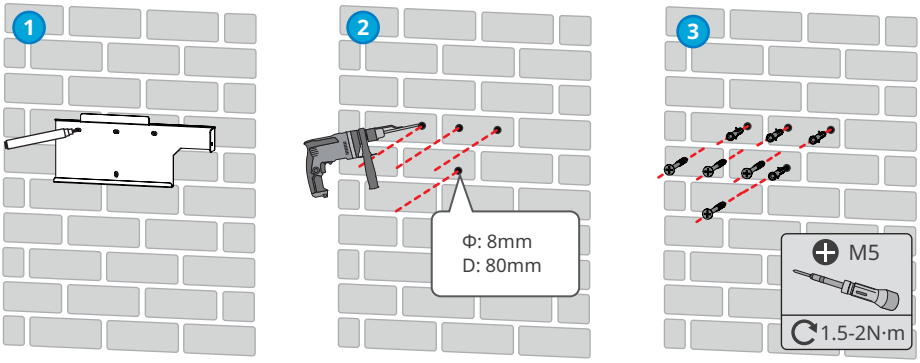
1
2
Φ: 8mm
D: 80mm
3
M5
1.5-2N·m

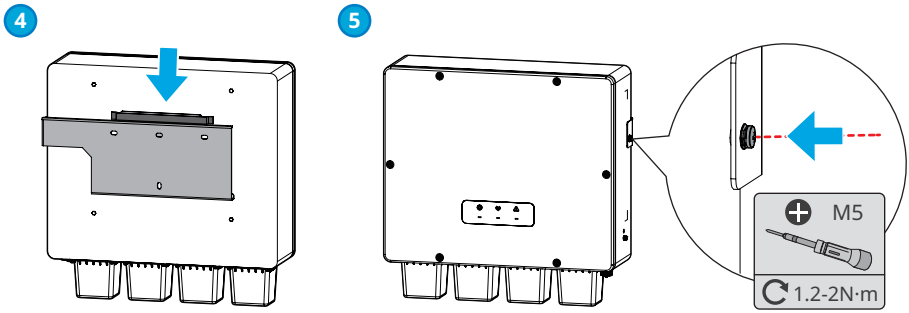
4
5
M5
1.2-2N·m

6 Electrical Connection

6.1 Safety Precaution

DANGER

- Perform electrical connections in compliance with local laws and regulations. Including operations, cables, and component specifications.
- Disconnect the DC switch and the AC output switch of the STS to power off the STS before any electrical connections. Do not work with power on. Otherwise, an electric shock may occur.
- Tie the cables of the same type together, and place cables of different types apart. Do not place the cables entangled or crossed.
- If the tension is too large, the cable may be poorly connected. Reserve a certain length of the cable before connecting it to the STS cable port.
- Make sure that the cable conductor is in full contact with the terminal and the cable insulation part is not crimped with the terminal when crimping the terminal. Otherwise, the STS may not be able to work properly, or the connection may be unreliable during working, which may cause terminal block damage, etc.

NOTICE

- Wear personal protective equipment like safety shoes, safety gloves, and insulating gloves during electrical connections.
- All electrical connections should be performed by qualified professionals.
- Cable colors in this document are for reference only. The cable specifications shall meet local laws and regulations.

6.2 Connecting the PE cable

WARNING

- The PE cable connected to the enclosure of the inverter cannot replace the PE cable connected to the output port. Make sure that both of the two PE cables are securely connected.
- To improve the corrosion resistance of the terminal, you are recommended to apply silica gel or paint on the ground terminal after installing the PE cable.
- The grounding cable should be prepared by customers.

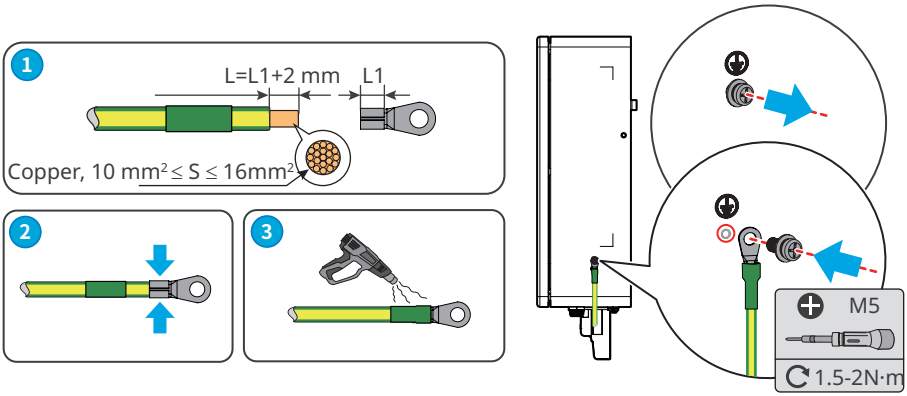

6.3 Connecting the AC Cable

WARNING

- An AC circuit breaker should be installed between the STS and the grid to make sure that the STS can safely disconnect the grid when an exception happens. Multiple STS cannot share one AC circuit breaker. Select an appropriate AC circuit breaker in compliance with local laws and regulations.
- Please ensure that the STS is connected to the inverter, power grid, BACK-UP load or generator in the correct position. Incorrect connections may cause damage to the device.

Connect a Residual Current Device (RCD for short) based on local laws and regulations. Type A RCD can be connected to the outside of the STS for protection when the DC component of the leakage current exceeds the limit value. The following RCDs are for reference:

No.	STS Model	RCD Type (ON-GRID)	RCD Type (BACK-UP)
1	STS200-80-10	500mA	30mA

WARNING

- When wiring, the AC cable matches the "L1", "L2", "L3", "N", and grounding ports of the AC terminals perfectly. If the cable connection is incorrect, it may cause power outage.
- Ensure that the whole cable cores are inserted into the terminal holes. No part of the cable core can be exposed.
- Ensure that the cables are connected securely. Otherwise it will cause damage to the inverter due to overheat during its operation.

No.	Cable	Requirement	Specification
1	INVERTER	Outdoors copper cable	• Cable outer diameter Φ: 18-38mm • Conductor cross-sectional area S: 20mm²-25mm²
2	GENERATOR		
3	BACKUP LOAD		When the output current of the BACKUP LOAD port or the input/output current of the GRID port is less than 90A: • Cable outer diameter Φ: 18-38mm • Conductor cross-sectional area S: 20mm²-25mm² When the output current of the BACKUP LOAD port or the input and output current of the GRID port is greater than 90A and less than or equal to 150A: • Cable outer diameter Φ: 18-38mm • Conductor cross-sectional area S: 25mm²-50mm² When the output current of the BACKUP LOAD port or the input and output current of the GRID port is greater than 150A and less than or equal to 200A: • Cable outer diameter Φ: 32-38mm • Conductor cross-sectional areaS: 50mm²-70mm² • RVV 5 core cable is recommended*
4	GRID		
*If single core cable is applied, use fireproofing mud on AC cover to ensure protection class.			

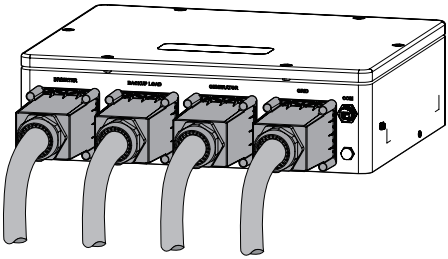

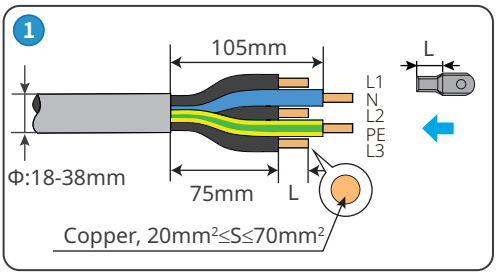
1
105mm
L
L1
N
L2
PE
L3
Φ:18-38mm
75mm
L
Copper, 20mm²≤S≤70mm²

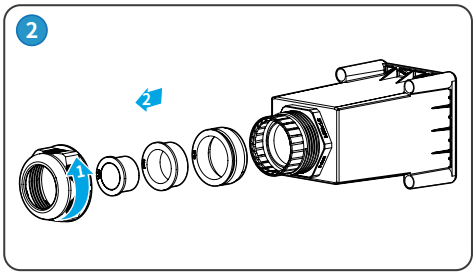
2
1

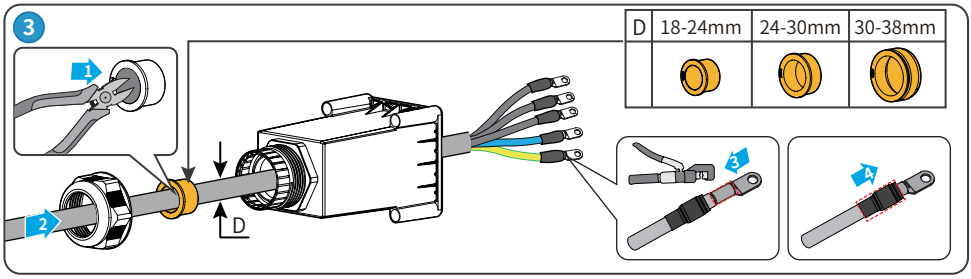
3
D
18-24mm
24-30mm
30-38mm
1
2
D
3
4

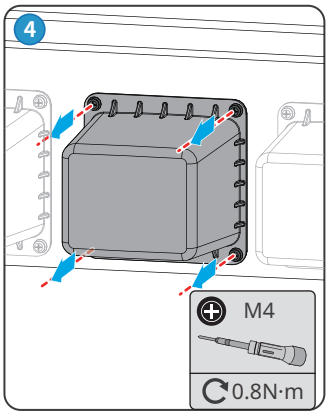
4
M4
0.8N·m

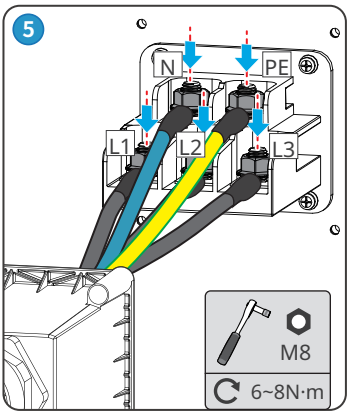
5
N
PE
L1
L2
L3
M8
6~8N·m

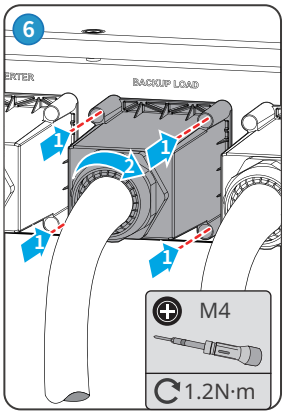
6
BACKUP LOAD
1
2
M4
1.2N·m

6.4 Communication Connection

NOTICE

Please use the communication cable in the scope of delivery for the communication with inverter.

1

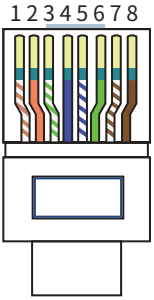

No.	Color	COM
1	Orange and White	+12V_S
2	Orange	GND_S
3	Green and White	GND_S
4	Blue	STS_RX
5	Blue and White	485_A1
6	Green	485_A1
7	Brown and White	485_B1
8	Brown	485_B1

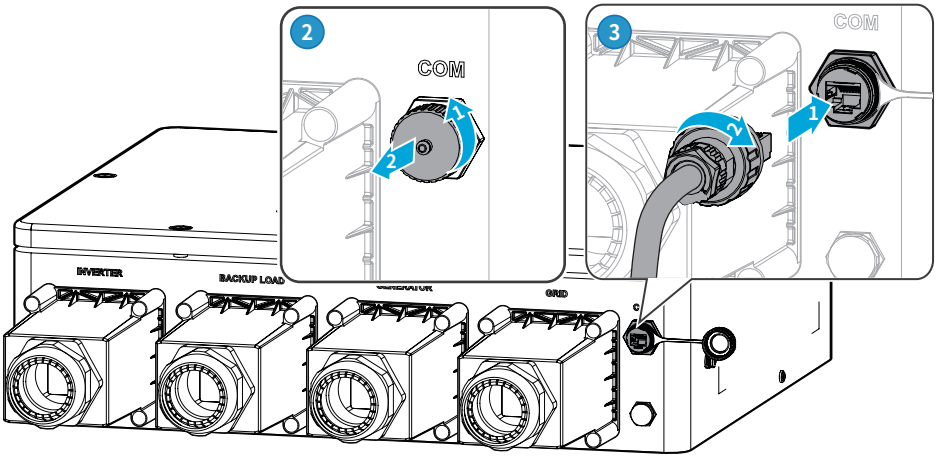

7 Equipment Commissioning

7.1 Check Before Power ON

No.	Check Item
1	The equipment is firmly installed at a clean place that is well-ventilated and easy-to operate.
2	The PE, DC input, AC output, and communication cables are connected correctly and securely.
3	Cable ties are intact, routed properly and evenly.
4	Unused ports are sealed.
5	The voltage and frequency at the equipment grid connection point meet requirements.

7.2 Power On

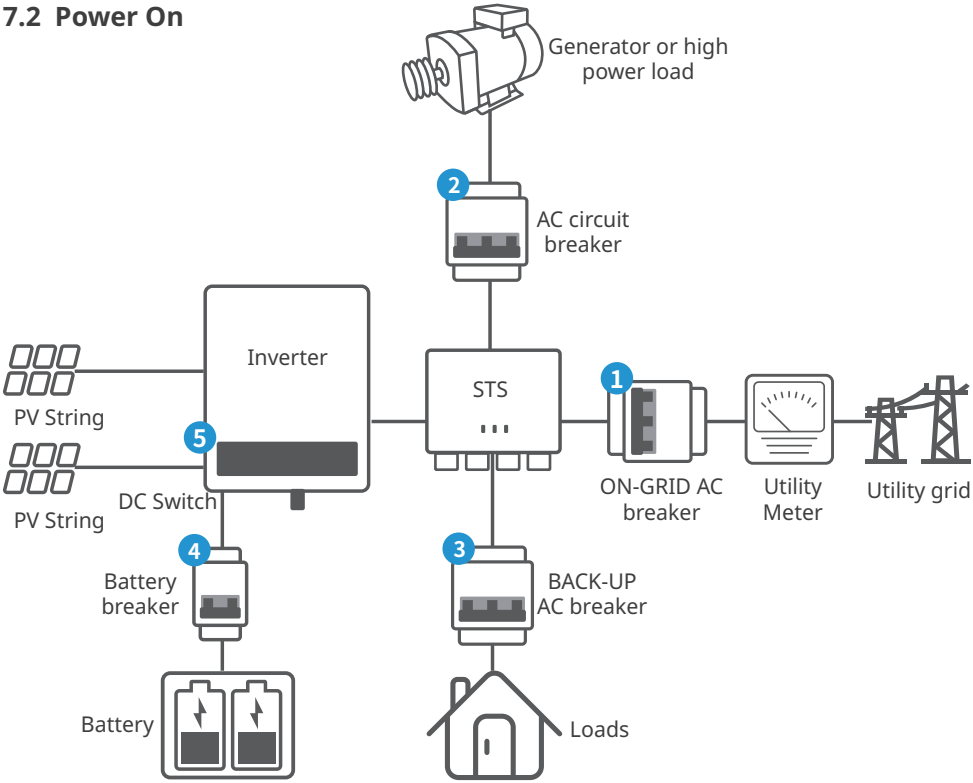

Power On

Connect: 1 → 2 → 3 → 4 → 5

7.3 Indicators

Indicator	Status	Description
BACK-UP		The energy storage system is in the BACK-UP (off-grid) mode.
		The energy storage system is in the ON- GRID (on-grid) mode.
		The energy storage system is in the waiting status.
COM		The power supply of STS is normal and its communication with the inverter is normal.
		The power supply of STS is normal and its communication with the inverter fails.
		The power supply of STS fails and its communication with the inverter fails.
FAULT		A fault has occurred.
		No fault has occurred.

8 Maintenance

8.1 Power Off

DANGER

INSTRUCTIONS PERTAINING TO A RISK OF FIRE OR ELECTRIC SHOCK.

- Power off the equipment before operations and maintenance. Otherwise, the equipment may be damaged or electric shocks may occur.
- Delayed discharge. Wait until the internal components of the equipment are discharged after power off.

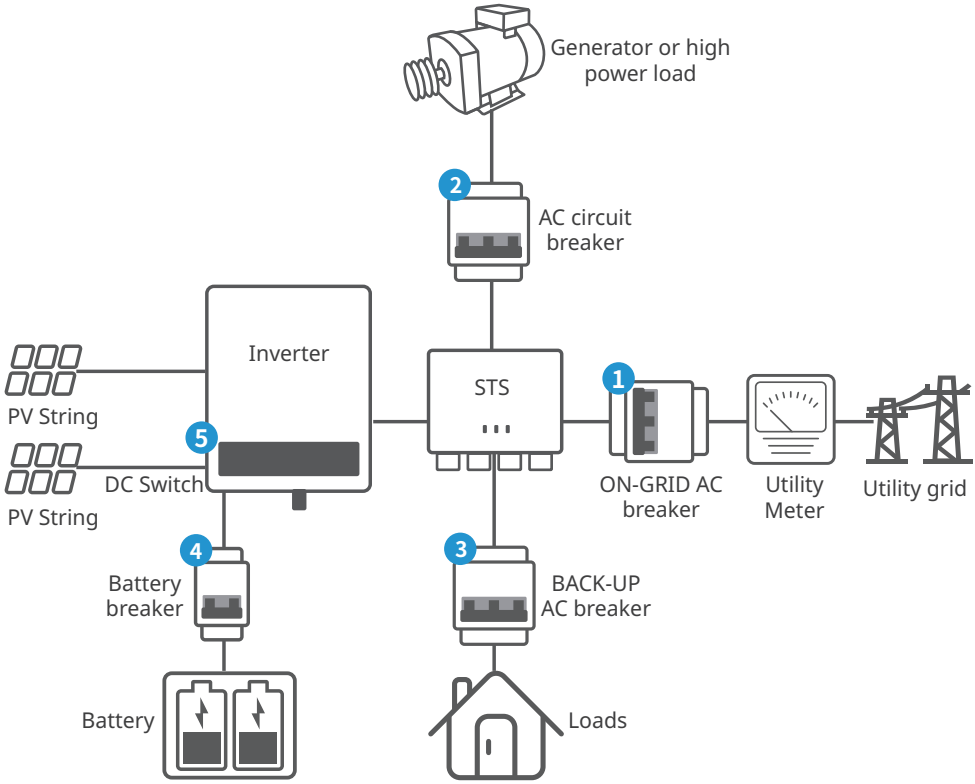

Power Off

Disconnect: 1 → 2 → 3 → 4 → 5

8.2 Removing the Equipment

WARNING

- Make sure that the equipment is powered off.
- Wear proper PPE before any operations.

Step 1: Disconnect all the cables, including DC cables, AC cables, communication cables, the communication module, and PE cables.
Step 2: Remove the equipment from the mounting plate.
Step 3: Remove the mounting plate.
Step 4: Store the equipment properly. Ensure that the storage conditions meet the requirements for future use.

8.3 Disposing of the Inverter

If the equipment cannot work anymore, dispose of it according to the local disposal requirements for electrical equipment waste. The equipment cannot be disposed of together with household waste.

8.4 Troubleshooting

Please refer to the Troubleshooting of the inverter of the system if a fault occurs.

8.5 Routine Maintenance

Maintaining Item	Maintaining Method	Maintaining Period
System Clean	Check the heat sink, air intake, and air outlet for foreign matter or dust.	Once 6-12 months
Electrical Connection	Check whether the cables are securely connected. Check whether the cables are broken or whether there is any exposed copper core.	Once 6-12 months
Sealing	Check whether all the terminals and ports are properly sealed. Reseal the cable hole if it is not sealed or too big.	Once a year

9 Technical Parameters

Technical Data	STS200-80-10
Electrical Data	
Nominal Output Voltage (V)	380/400, 3L/N/PE
Output Voltage Range (V)	176~276
Nominal AC Frequency (Hz)	50/60
AC Frequency Range (Hz)	45~65
Inverter Side Data	
Nominal Apparent Power (VA)	50,000
Max. Apparent Power (VA)*1	50,000
Nominal Current (A)	72.5
Max. Current (A)*2	75.8
Grid Side Data	
Nominal Apparent Power (VA)	50,000
Max. Apparent Power (VA)	50,000
Nominal Current (A)	72.5
Max. Current (A)	75.8
Back-up Side Data	
Nominal Apparent Power (VA)	50,000
Max. Apparent Power without Grid (VA)	55,000
Max. Apparent Power with Grid (VA)	138000
Nominal Current (A)	72.5
Max. Current (A)*3	83.3
Generator/PV inverter Side Data	
Nominal Apparent Power (VA)	50,000
Max. Apparent Power (VA)	55,000
Nominal Current (A)	72.5
Max. Current (A)	83.3
Other Electrical Data	
Nominal Current of AC Side Relay (A)	200.0
Nominal Current of Generator Side Relay (A)	90.0
Switch Time(ms)	<10

Technical Data	STS200-80-10
General Data	
Operating Temperature Range (℃)	-35~+60
Max. Operating Altitude (m)	4000
Cooling Method	Natural Convection
Communication with Inverter	RS485
Weight (kg)	16.5
Dimension (W×H×D mm)	510*425*156
Noise Emission (dB)	<48
Topology	Non-isolated
Mounting Method	Wall Mounted
Ingress Protection Rating	IP65
Overvoltage Category	AC III
Protective Class	I
Certification	
Safety Regulation	IEC62109-1/-2
EMC	EN61000-6-1, EN61000-6-2, EN61000-6-3, EN61000-6-4

*1: When the inverter is operating in the off-gird state, Max.Apparent Power of Inverter Side can be reached 55kW.
*2: When the inverter is operating in the off-gird state, Max. Current of Inverter Side can be reached 83.3A.
*3: when the grid is on, the Max. Current of Backup side can be reached 200A.

GoodWe Website

GoodWe Technologies Co., Ltd.

No. 90 Zijin Rd., New District, Suzhou, 215011, China

www.goodwe.com

service@goodwe.com

Local Contacts

Other ManualsLib Projects

www.manualslib.com

www.manualslib.de

www.manualslib.es

www.manualslib.fr

www.manualslib.nl

www.manualslib.mx

www.manualslib.tech 30+ Languages