SigenStor Neo Home

User Manual

Version: 01

Release date: 2026.07.22

Copyright Notice

Copyright© 2026 SigenergyTechnology Co., Ltd. All Rights Reserved.

Description in this document may contain predictive statements regarding financial and operating results, product portfolio, new technology, configurations and features of product. Several factors could cause difference between actual results and those expressed or implied in the predictive statements. Therefore, description in this document is provided for reference purpose only and constitutes neither an offer nor an acceptance. Sigenergy Technology Co., Ltd. may change the information at any time without notice.

SIGENERGY and other Sigenergy trademarks are owned by Sigenergy Technology Co., Ltd.

All trademarks and registered trademarks in this document belong to their owners.

Website	LinkedIn	YouTube

www.sigenergy.com

Contents

Revision History 05
Preface 06
Chapter 1 Safety Precautions 07
Chapter 2 Introduction to Energy Storage System (ESS) 09
2.1 Product Introduction 09
2.1.1 Inverter 09
2.1.2 Battery Pack 11
2.1.3 Power Sensor 12
2.1.4 Bypass Isolator Switch 14
2.1.5 Communication Module 15
2.2 Product Appearance 16
2.2.1 Appearance and Dimensions 16
2.2.2 Port Introduction 18
2.3 Label Description 20
2.4 Grid Power Supply Methods 21
2.4.1 Single-phase System 21
2.4.2 Three-phase System 22
2.5 System Wiring Introduction 23
Chapter 3 Location Requirements 27
Chapter 4 Device Installation and Wiring 30
Chapter 5 System Operation 31
5.1 Working Mode 31
5.2 Backup Power Setup 34
5.3 Peak Shaving 35
5.4 LED Indicator Status 38
5.5 mySigen App — Query and Settings 40
Chapter 6 System Maintenance 41
6.1 Routine Maintenance 41
6.2 Device Power-on/Power-off 42

6.3 Operating with Low Battery 44
6.4 Emergency Measures 45
6.5 Alarm List 47
Chapter 7 Appendix 48
7.1 Technical Parameters 48
7.2 Compliance Statements 49

Revision History

Version	Date	Description
01	2026.07.22	Initial release.

Preface

Overview

This document mainly introduces the SigenStor Neo Home device, covering product introduction, system wiring, and system operation and maintenance.

Intended Audience

This document is intended for product users and professionals.

Icon Definition

The following icons may be used in the document to indicate safety precautions or key information. Before installation and operation, please be familiar with and master the icons and the corresponding definitions.

Icon	Definition
Danger	Danger. Indicates an imminently hazardous situation which, if not avoided, will result in death or serious personal injury.
Warning	Warning. Indicates a potentially hazardous situation which, if not avoided, will result in serious personal injury or property damage.
Caution	Caution. Indicates a potentially hazardous situation which, if not avoided, will result in property damage.
Tips	Indicates important or key information and provides operation tips.

Chapter 1 Safety Precautions

Basic Information

Before installation, operation, and maintenance of the device, familiarize yourself with this document.
The "Caution," "Warning," and "Danger" statements described in this manual are only supplementary precautions to all safety notices.
Our company shall not be liable for device damage or property damage caused by the following reasons:

- Approval not obtained from national or regional power authorities.
- The installation environment does not comply with relevant international, national, or regional standards.
- Failure to comply with local laws, regulations, and standards when operating or maintaining the device.
- The installation area does not meet the requirements of the device.
- Failure to operate according to the instructions and precautions in the manual.
- Failure to follow the operational requirements indicated on warning labels on the device or tools.
- Negligence, improper operation, or deliberate damage.
- Battery capacity loss or irreversible damage resulting from your failure to charge the device in a timely manner.
- Damage resulting from unauthorized use of the device by you or a third party in a scenario other than the specified one. (For example, mixing our company's battery pack with other batteries, using our company's battery pack with inverters or converters from other brands, etc.)
- The device is damaged because the customer or a third-party company fails to use the accessories supplied with the packing box or purchase and install accessories of the same specifications.
- Device damage caused by unauthorized disassembly or replacement of the device or modification of software code, or other improper operations.
- Device damage caused by force majeure (such as war, earthquake, fire, storms, lightning, floods, and debris flow).
- Damage caused by the failure of the natural environment or external power parameters to meet the standard requirements for the normal operation of the device. For example, the actual operating temperature of the device is too high or too low.
- The device is stolen.
- The device is damaged after the warranty period expires.

Safety Requirements

Danger

- Battery pack overheating may cause fire, explosion, or other hazards. Do not expose the device to high-temperature environments or keep heat sources (such as direct sunlight, open flames, heaters, etc.) near the device for prolonged periods.
- Do not clean or soak the device with water, alcohol, oil, or other liquids to prevent leakage current or battery pack leakage.
- Do not strike or hit the device. If an accidental impact occurs, immediately stop using the device and promptly contact your installer or sales representative. The device may be used again only if it passes the inspection and evaluation by a professional.

Warning

- Do not touch the hot surface around the heat sink when the device is in operation.
- Do not cover the heat sink vents while the device is operating. Maintain a heat-dissipation clearance of ≥ 300 mm (11.81 in) on both sides of the inverter to prevent fire caused by high temperatures.

Caution

- Do not use the device with faults. If the device experiences any abnormalities (e.g., battery pack leakage, visible deformation, etc.), promptly contact your installer or sales representative for handling. Do not disassemble the device yourself.
- Carbon dioxide fire extinguishers and ABC dry powder fire extinguishers are recommended.
- Contact your installer or sales representative promptly if the device cannot enter a charging state.

Do Not Use the Device in the Following Scenarios:

- When connected to public infrastructure systems.
- When connected to emergency medical device.
- When connected to elevators and other control devices.
- Any other critical systems.

Chapter 2 Introduction to Energy Storage System (ESS)

2.1 Product Introduction

2.1.1 Inverter

The SigenStor Neo EC inverter can be used in PV storage scenarios and must be used together with PV modules and the SigenStor Neo BAT.

2.1.1.1 Single-phase System (2.5–12.0)

Product Short Name	Model	Name
SigenStor Neo EC	SigenStor Neo EC 2.5 SP	Sigen Energy Controller 2.5 kW Single Phase
	SigenStor Neo EC 3.0 SP	Sigen Energy Controller 3.0 kW Single Phase
	SigenStor Neo EC 3.6 SP	Sigen Energy Controller 3.68 kW Single Phase
	SigenStor Neo EC 4.6 SP	Sigen Energy Controller 4.6 kW Single Phase
	SigenStor Neo EC 5.0 SP	Sigen Energy Controller 5.0 kW Single Phase
	SigenStor Neo EC 5.0 SP	Sigen Energy Controller 5.0 kW Single Phase for Brazil
	SigenStor Neo EC 6.0 SP	Sigen Energy Controller 6.0 W Single Phase
	SigenStor Neo EC 6.0 SP	Sigen Energy Controller 6.0 W Single Phase for Brazil
	SigenStor Neo EC 7.5 SP	Sigen Energy Controller 7.5 W Single Phase for Brazil
	SigenStor Neo EC 8.0 SP	Sigen Energy Controller 8.0 kW Single Phase
	SigenStor Neo EC 10.0 SP	Sigen Energy Controller 10.0 kW Single Phase
	SigenStor Neo EC 12.0 SP	Sigen Energy Controller 12.0 kW Single Phase

2.1.1.2 Three-phase System (3.0–15.0)

Product Short Name	Model	Name
SigenStor Neo EC	SigenStor Neo EC 3.0 TP	Sigen Energy Controller 3.0 kW Three Phase
	SigenStor Neo EC 4.0 TP	Sigen Energy Controller 4.0 kW Three Phase
	SigenStor Neo EC 5.0 TP	Sigen Energy Controller 5.0 kW Three Phase
	SigenStor Neo EC 6.0 TP	Sigen Energy Controller 6.0 kW Three Phase
	SigenStor Neo EC 7.5 TP	Sigen Energy Controller 7.5 kW Three Phase for Brazil
	SigenStor Neo EC 8.0 TP	Sigen Energy Controller 8.0 kW Three Phase
	SigenStor Neo EC 10.0 TP	Sigen Energy Controller 10.0 kW Three Phase
	SigenStor Neo EC 10.0 TP	Sigen Energy Controller 10.0 kW Three Phase for Brazil
	SigenStor Neo EC 10.0 TP BE	Sigen Energy Controller 10.0 kW Three Phase for Belgium
	SigenStor Neo EC 12.0 TP	Sigen Energy Controller 12.0 kW Three Phase
	SigenStor Neo EC 12.0 TP	Sigen Energy Controller 12.0 kW Three Phase for Brazil
	SigenStor Neo EC 15.0 TP	Sigen Energy Controller 15.0 kW Three Phase
	SigenStor Neo EC 15.0 TP	Sigen Energy Controller 15.0 kW Three Phase for Brazil

2.1.2 Battery Pack

Storable energy. The following battery pack models are supported for use together.

Product Short Name	Model	Name
SigenStor Neo BAT	SigenStor Neo BAT 6.0	Sigen Battery 6.02 kWh
	SigenStor Neo BAT 8.0	Sigen Battery 7.52 kWh

2.1.3 Power Sensor

Provide data collection at the grid connection point to enable zero-power grid connection functionality.

Single-phase System

Product Short Name	Model	Name
Power Sensor	Sigen Sensor SP-DH（SDM230-M)	Sigen Power Sensor Single Phase DH
	Sigen Sensor SP-CT100（SEM1-M-2)	Sigen Power Sensor Single Phase CT100
	Sigen Sensor SP-CT100（iDM111)	Sigen Power Sensor Single Phase CT100
Wireless Bridge	Sigen Sensor Sub1G Kit	Sigen Sensor Sub1G Kit Standard

Three-phase System

Product Short Name	Model	Name
Power Sensor	Sigen Sensor TP-DH（SDM630-M)	Sigen Power Sensor Three Phase DH
	Sigen Sensor TPX-CH (DTSU6663×230/400V1.5(6)A)	Sigen Power Sensor Three Phase TPX CH
	Sigen Sensor TP-CT100 (SEM3-M-2 120A/40mA)	Sigen Power Sensor Three Phase External CT 100 A
	Sigen Sensor TP-CT300（SEM3-M-2 300A/40mA)	Sigen Power Sensor Three Phase External CT 300 A
	Sigen Sensor TP-CT600（SEM3-M-2 600A/40mA)	Sigen Power Sensor Three Phase External CT 600 A
	Sigen Sensor TP-CT100 （iDM111 100A/ 40mA)	Sigen Power Sensor Three Phase External CT 100 A
	Sigen Sensor TP-CT300 （iDM111 300A/ 40mA)	Sigen Power Sensor Three Phase External CT 300 A
	Sigen Sensor TP-CT600 （iDM111 600A/ 40mA)	Sigen Power Sensor Three Phase External CT 600 A
	Sigen Sensor TP-RC300 （iDM411 MCT-O 300A/40mA)	Sigen Power Sensor Three Phase TP RC300
	Sigen Sensor TP-RC1000 （iDM411 MCT-O 1000A/40mA)	Sigen Power Sensor Three Phase TP RC1000
	Sigen Sensor TP-RC3000 （iDM411 MCT-O 3000A/40mA)	Sigen Power Sensor Three Phase TP RC3000

Product Short Name	Model	Name
Wireless Bridge	Sigen Sensor Sub1G Kit	Sigen Sensor Sub1G Kit Standard

2.1.4 Bypass Isolator Switch

For use with our company's inverters as a bypass switch between the company's inverters and the user load.

Product Short Name	Model	Name
Single-phase Bypass Isolator Switch (2PIN)	BB1HT-125-2CO-80A	European Single-phase Bypass Isolator Switch (2PIN)
Three-phase Bypass Isolator Switch (4PIN)	BB1HT-125-4CO-80A	European Three-Phase Bypass Isolator Switch (4PIN)

2.1.5 Communication Module

For use with our company's inverters to enable communication between the inverter and the management system via 4G.

Product Short Name	Model	Name
CommMod	Sigen CommMod	Sigen Communication Module

2.2 Product Appearance

2.2.1 Appearance and Dimensions

Single-phase System Inverter and Battery Pack

Tips

- The appearance is shown with a configuration of three SigenStor Neo BAT units as an example.
- The overall thickness of the inverter is 235 mm (9.25 in), including cooling fins.

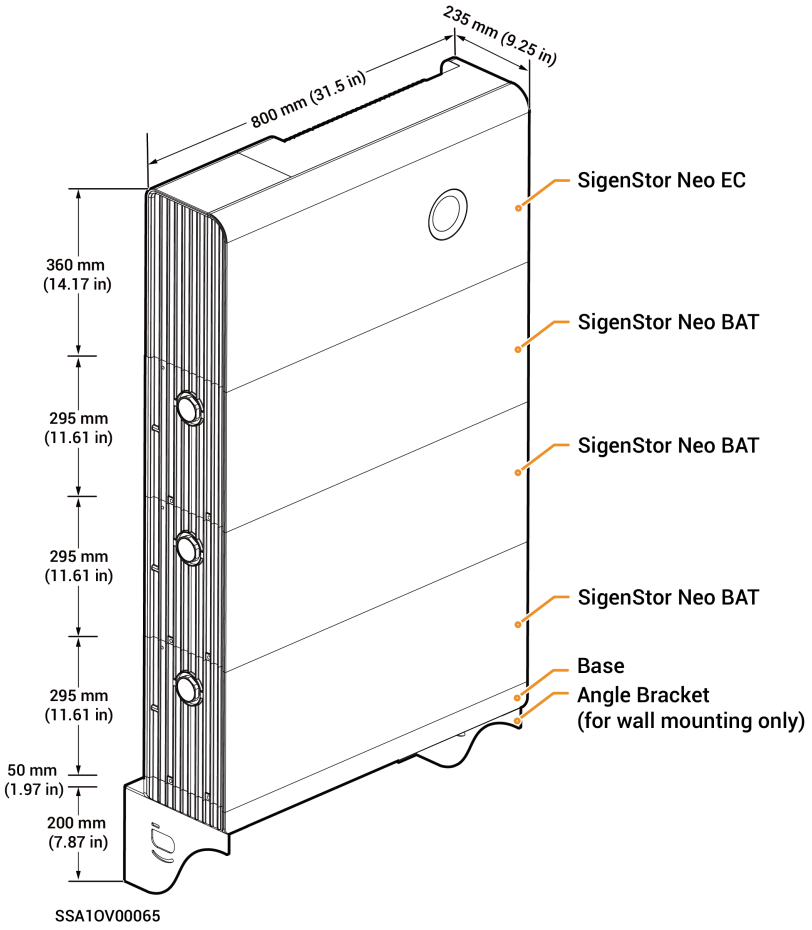

Three-phase System Inverter and Battery Pack

Tips

- The appearance is shown with a configuration of three SigenStor Neo BAT units as an example.
- The overall thickness of the inverter is 240 mm (9.45 in), including cooling fins.

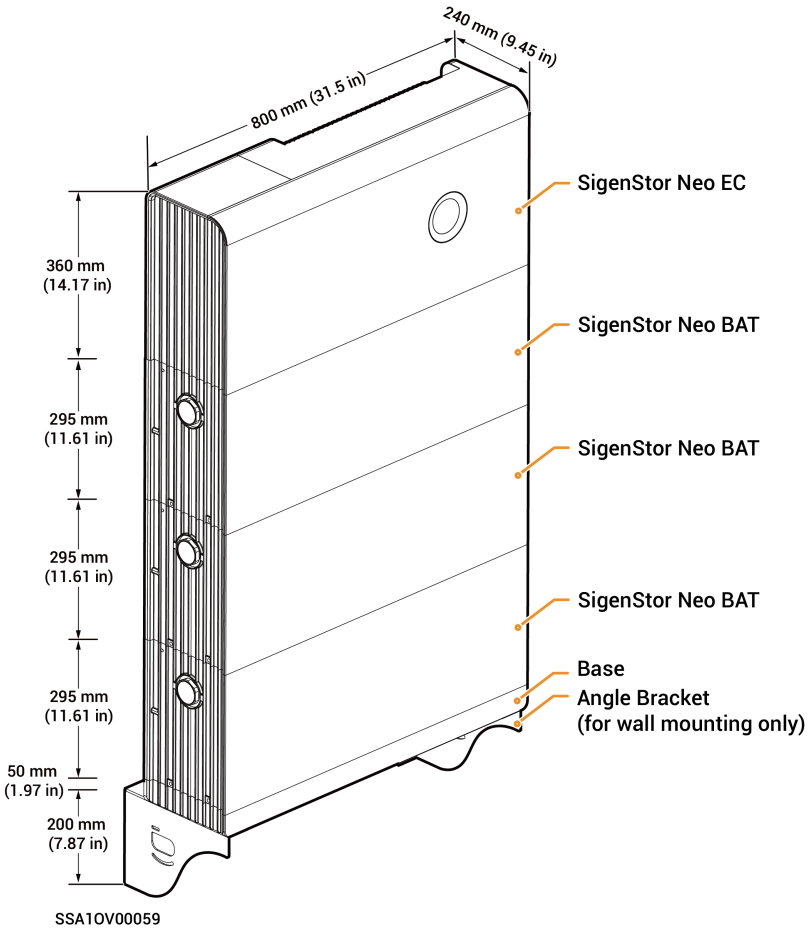

CommMod

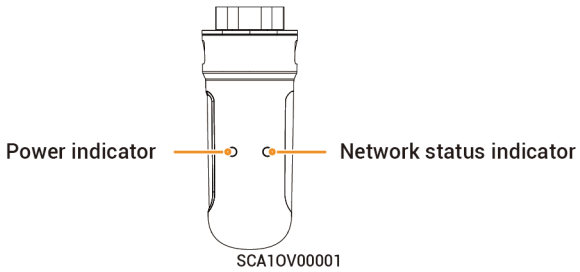

2.2.2 Port Introduction

2.2.2.1 Left View of Single-phase System (2.5–12.0) Inverter

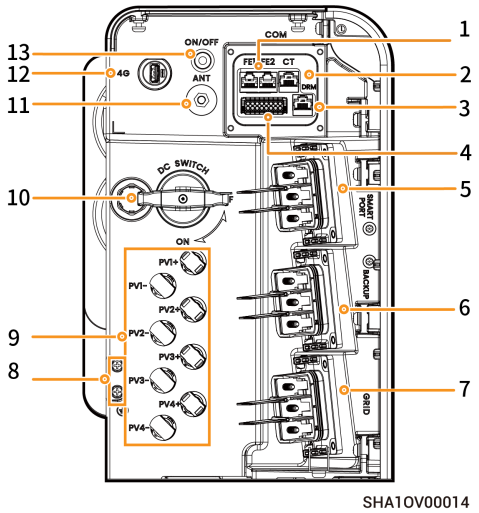

No.	Marking	Name
1	FE 1/ FE 2	Network cable interface
2	CT	CT sensor port
3	DRM	DRM
4	-	RS485 communication interface
5	SMART PORT	Smart port
6	BACKUP	Backup power port
7	GRID	AC port
8	⏚	Grounding
9	PV1+/PV2+/PV3+/PV4+/PV1-/PV2-/PV3-/PV4-	DC input interface
10	DC SWITCH	DC switch
11	ANT	Antenna interface
12	4G	CommMod interface
13	ON/OFF	Black start button

2.2.2.2 Left View of Three-phase System (3.0–15.0) Inverter

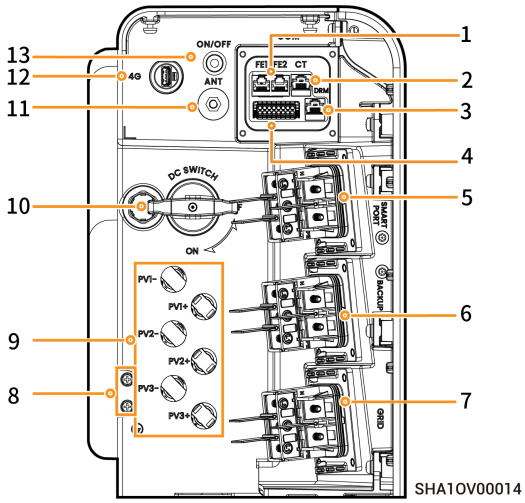

No.	Marking	Name
1	FE 1/ FE 2	Network cable interface
2	CT	CT sensor port
3	DRM	DRM
4	-	RS485 communication interface
5	SMART PORT	Smart port
6	BACKUP	Backup power port
7	GRID	AC port
8	⏚	Grounding
9	PV1+/PV2+/PV3+/PV1-/PV2-/PV3-	DC input interface
10	DC SWITCH	DC switch
11	ANT	Antenna interface
12	4G	CommMod interface
13	ON/OFF	Black start button

2.3 Label Description

Symbol	Definition
	Danger! High voltage High voltage exists inside the device when powered on. Do not open the casing when the device is running. Any maintenance or servicing operations must be performed by trained and skilled electrical engineers.
	Warning! Life-threatening Potential risks exist when the device is operating. Please take protective measures before operating the device.
	After the device is powered off, internal components discharge in a delay time. Wait for the duration according to the delay time on the label until the device is fully discharged.
	Warning! Danger! Hot The surface of the heat dissipation area is hot when the device is operating. Do not touch it to avoid burns.
	Operate the device by referring to the User Manual.
	GND symbol

2.4 Grid Power Supply Methods

2.4.1 Single-phase System

- Supported grid power modes are TN-S, TN-C, TN-C-S, and TT.
- When the TT mode is adopted, the voltage between neutral and protective earth shall be less than 30 V.

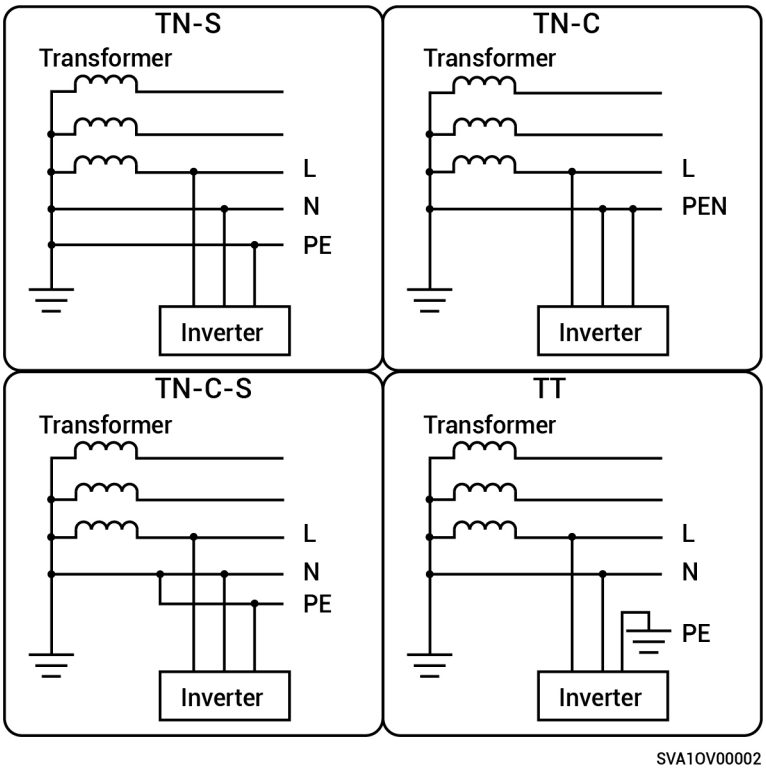

2.4.2 Three-phase System

- Supported grid power modes are TN-S, TN-C, TN-C-S, TT, and IT.
- When the TT mode is adopted, the voltage between neutral and protective earth shall be less than 30 V.

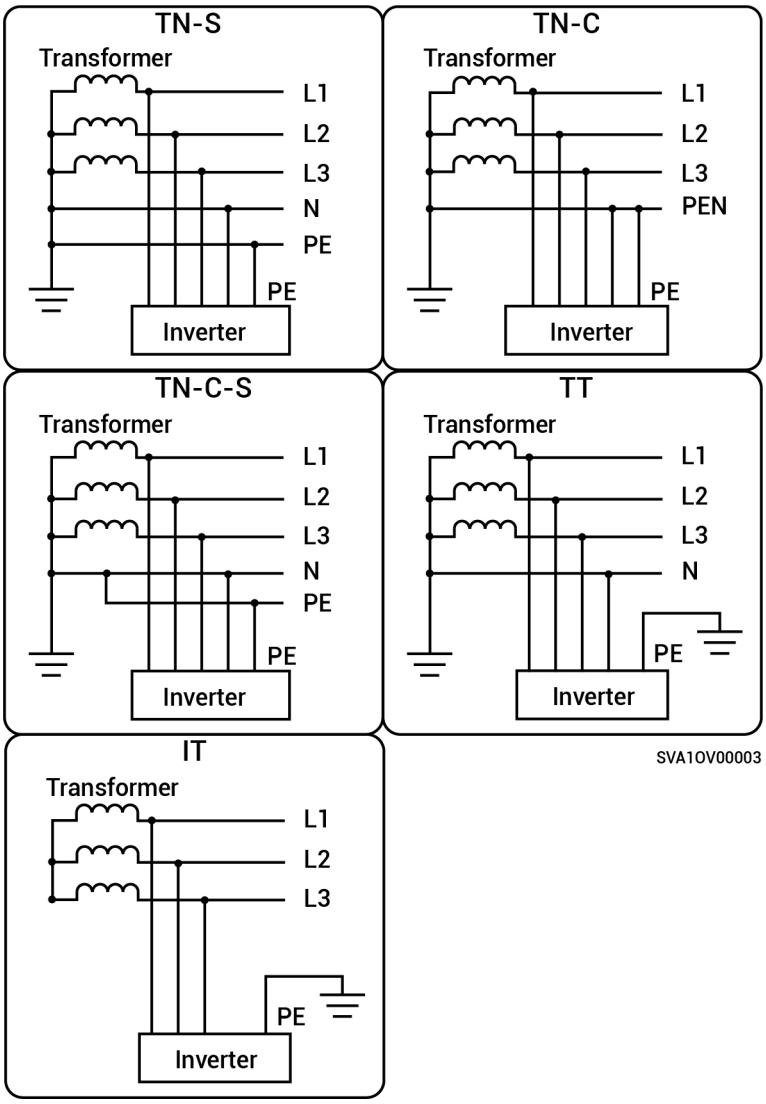

2.5 System Wiring Introduction

- Our products can be used in residential energy storage systems (ESS). The residential energy storage system consists of PV panels, inverters, battery packs, the main control switch, SMART PORT, loads, the grid, etc.
- A residential energy storage system is mainly intended to store direct current generated by the PV panels in the battery packs and can also convert the electric energy in the PV panels and battery packs into alternating current to power loads or be fed into the power grid.

Tips

Under backup system wiring, the duration of off-grid operation of the backup power load is related to the power supply capacity of the PV storage system. If there is an abnormality in the power supply of the PV storage system during off-grid operation (including but not limited to abnormal PV power generation, insufficient battery power, and abnormal power supplies to the diesel generator), the backup power load will still be unable to operate.

System Wiring Diagram of Whole-house Backup Power

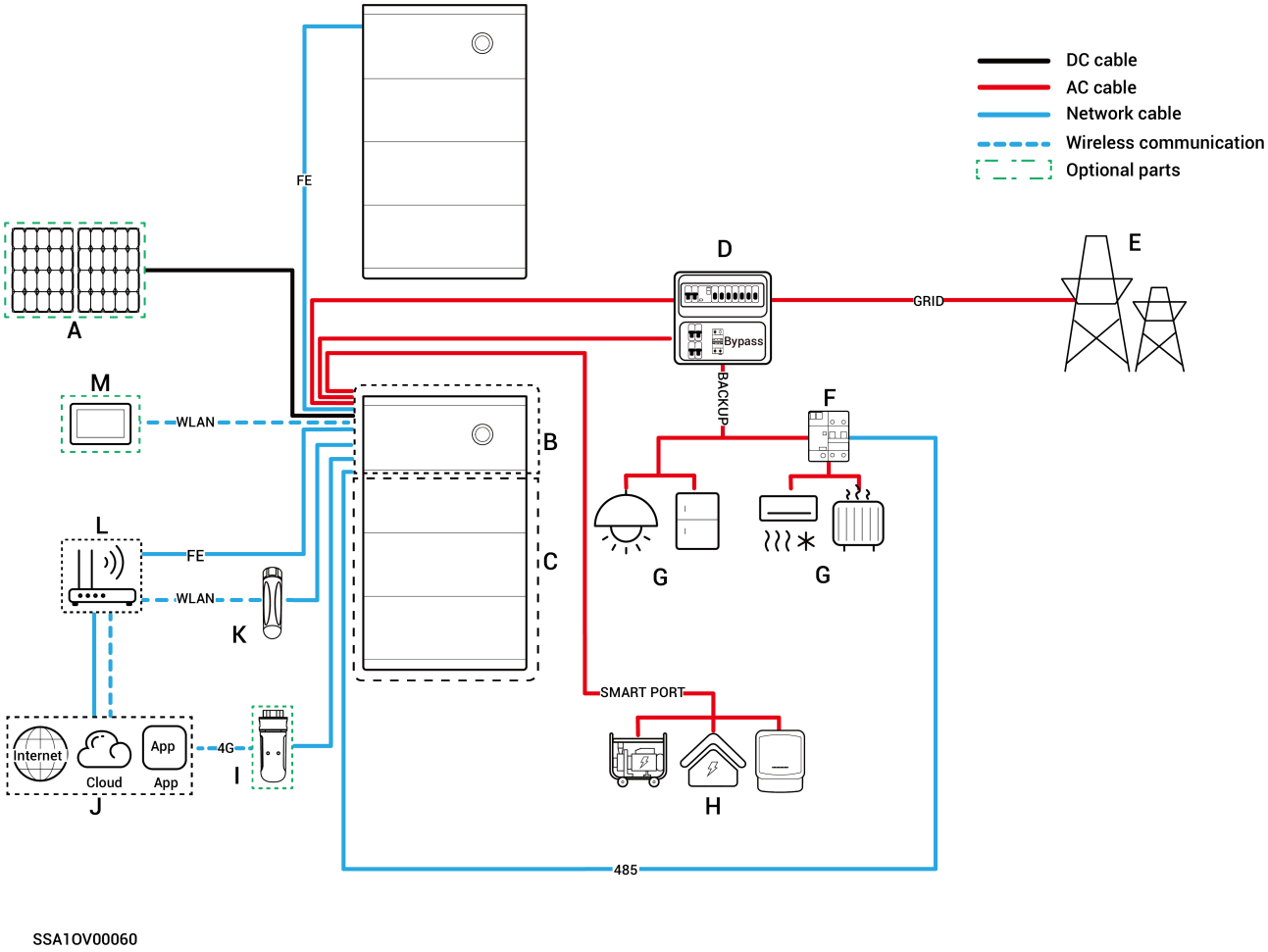

A. PV panel B. SigenStor Neo EC C. SigenStor Neo BAT D. Distribution box

E. Grid	F. Smart miniature circuit breaker	G. Load	H. SMART PORT
I. CommMod	J. mySigen	K. Antenna	L. Router
M. External tablet			

Tips

- When SigenStor Neo units ≤ 3 are cascaded, a Gateway is not required; when 3 < SigenStor Neo units ≤ 50 are cascaded, a Gateway is required.
- The diesel generator can serve as backup power for long-term off-grid scenarios, enabling a seamless power experience when switching between PV storage and diesel generator.
- All the power equipment in the owner's home can be connected as smart loads. To ensure that this product maximizes the benefits to users, it is recommended that the high-power devices be connected as smart loads (heat pumps, pool heaters, clothes dryers, immersion heaters, etc.). These loads can be shed when the stored energy is insufficient. Connect other low-power devices as household loads (heat pumps, pool heaters, clothes dryers, immersion heaters, etc.). These loads can be shed when the stored energy is insufficient. Other low-power equipment are connected as home loads (lights, routers, etc.) The maximum power of the immersion heater must be ≤ 13.8 kW / 63 A.
- It is recommended to use Fast Ethernet and WLAN for communication with inverters. When free 4G traffic of CommMod runs out, users must top up their accounts or replace an SIM card.
- Use a CT loop cable of approximately 11 m (36.09 ft); maximum 20 m (65.62 in). Purchase the cable yourself. The cable length should be limited for good communication. Too long cable degrades the communication effect.
- The rated current of the Bypass Isolator Switch ≥ the rated current (In) of the circuit (63 A). Use C-type circuit breakers for household mixed loads, small motors, and switching power supplies; use D-type circuit breakers for large heavy motors.

Warning

Place the common contact of the Bypass Isolator Switch on the inverter's BACKUP load side. Do not connect it to the GRID side. If connected to the GRID side, when the inverter's off-grid mode and bypass mode operate simultaneously, during a grid outage the power distribution cabinet connected to the inverter's GRID port may still be energized with high voltage, posing an electric shock risk.

Select a separate Bypass Isolator Switch and wire it according to the wiring diagram shown below.

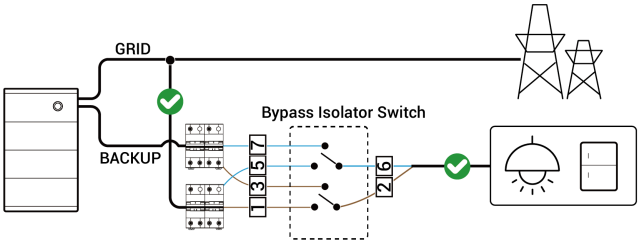

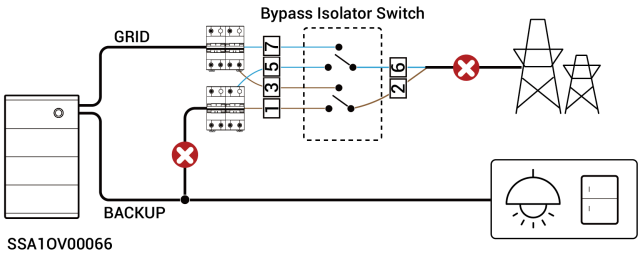

System Wiring of Partial Backup

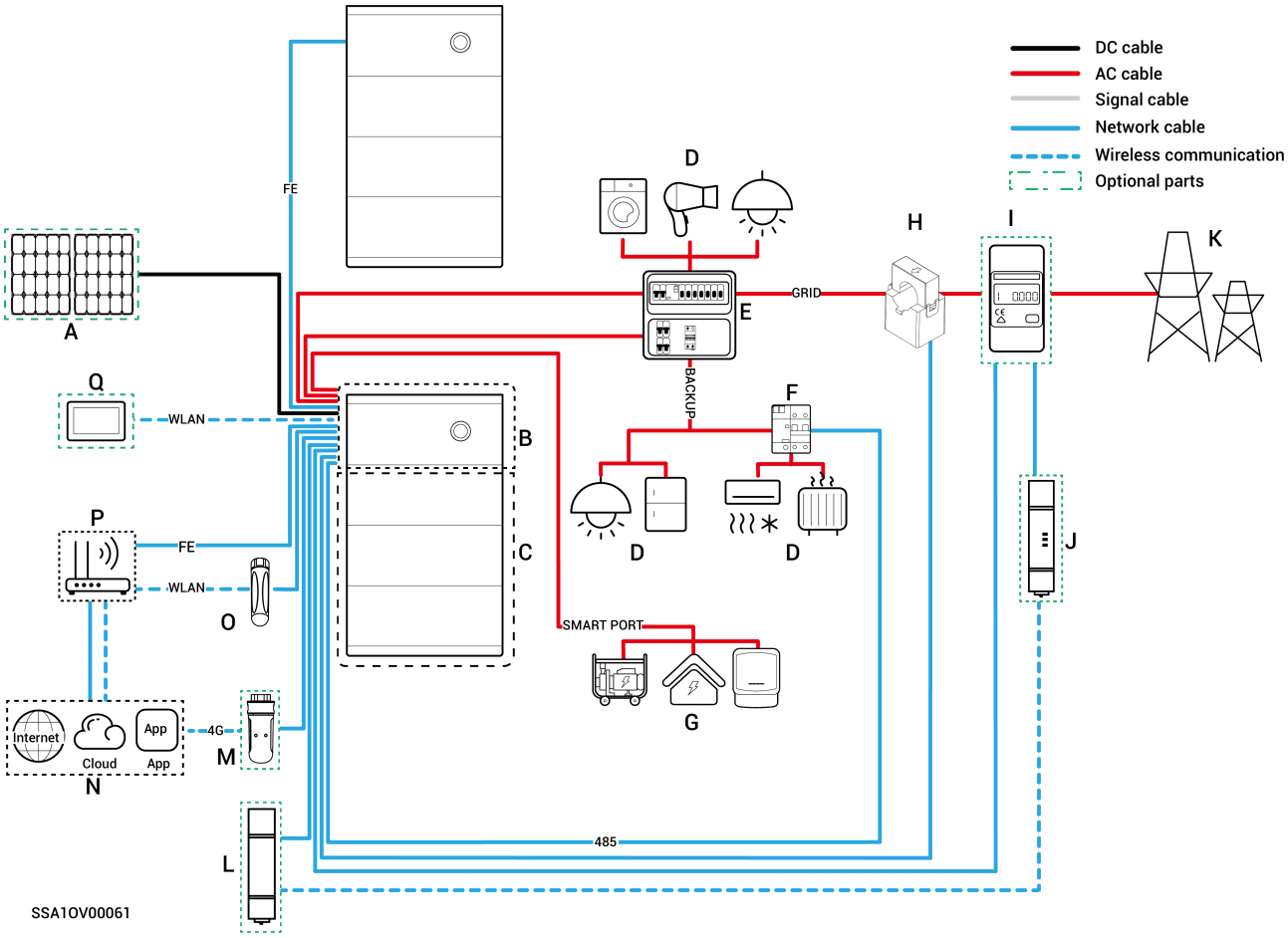

A. PV panel

B. SigenStor Neo EC

C. SigenStor Neo BAT

D. Loads

E. Distribution box

F. Smart miniature circuit breaker

G. SMART PORT

H. CT sensor

I. Power sensor	J. SUB-1G-A	K. Power grid	L. SUB-1G-B
M. CommMod	N. mySigen	O. Antenna	P. Router
Q. External tablet			

Tips

- When SigenStor Neo units ≤ 3 are cascaded, a Gateway is not required; when 3 < SigenStor Neo units ≤ 50 are cascaded, a Gateway is required.
- SigenStor Neo EC (2.5–12.0) SP: The AC switch connected to each single-phase system inverter must have a rated voltage ≥ 240 Va.c., with a recommended rated current of 63 A.
- SigenStor Neo EC (3.0–15.0) TP: The AC switch connected to each three-phase system inverter must have a rated voltage ≥ 380 Va.c., and the recommended rated current is 63 A.
- If E (distribution box) features leakage protection, it is recommended that the rated residual operating current be greater than or equal to the number of inverters × 100 mA.
- For single-phase system inverters, the AC switch in the distribution panel must have a rated voltage ≥ 240 Va.c.; for three-phase system inverters, the AC switch in the distribution panel must have a rated voltage ≥ 380 Va.c.. The rated current must be ≥ Inverter's maximum output current x Number of paralleled units x 1.25[1].
- The power sensor features data collection at the grid connection point to achieve zero-power grid connection. When only whole-house backup power is provided, the power sensor is not required; when partial backup power is combined with zero-power grid connection control, the power sensor is required.
- CT sensors support data collection at the grid connection point to enable zero-power grid connection. When only whole-house backup power is provided, the CT sensor is not required; when partial backup power is combined with zero-power grid connection control, the CT sensor is required.
- It is recommended to use Fast Ethernet and WLAN for communication. When free 4G traffic of Sigen CommMod runs out, users must top up their accounts or replace a SIM card.
- Use a CT loop cable of approximately 11 m (36.09 ft); maximum 20 m (65.62 in). Purchase the cable yourself. The cable length should be limited for good communication. Too long cable degrades the communication effect.
- The rated current of the Bypass Isolator Switch ≥ the rated current (In) of the circuit (63 A). Use C-type circuit breakers for household mixed loads, small motors, and switching power supplies; use D-type circuit breakers for large heavy motors.

Note [1]: The inverter's maximum output current can be found on the product Datasheets.

Chapter 3 Location Requirements

Tips

- Before installing the device, be sure to read the following installation requirements carefully. Our company shall not be held liable for any device malfunction, damage, or personal injury occurring during operation due to failure to follow operational requirements.
- During actual installation, the selection of installation location should comply with local firefighting, environmental protection regulations, and other relevant laws. The specific installation location planning should be subject to the installer or engineering, procurement, and construction (EPC) contracts.
- The device can be installed indoors and outdoors. Install the device in strict accordance with installation instructions given in this section and local laws and regulations.

Installation Environment Requirements

- Do not install the device in a smoky, flammable, explosive, or corrosive environment.
- Avoid exposing the device to direct sunlight, rain, standing water, snow, or dust. Install the device in a sheltered place. Take preventive measures in operating areas prone to natural disasters such as floods, mudslides, earthquakes, and typhoons.
- Do not install the device in an environment with strong electromagnetic interference (EMI).
- The temperature and humidity of the installation environment should meet device requirements.
- The device shall be installed in an area at least 500 m (1640.42 ft) away from corrosion sources such as high salt or high acidity (corrosion sources include but are not limited to seaside, thermal power plant, chemical plant, smelter, coal plant, rubber plant, and electroplating plant).
- In areas with good marine environments, such as Norway, where the nearshore salinity is ≤ 28 psu, the mounting distance of the device from the coastline can be appropriately relaxed to ≥ 200 m (656.17 ft).
- If the outer surface of the device is damaged, please repaint the device in time.

Installation Location Requirements

- Do not tilt the device or place it upside down. Ensure that the device is horizontally installed.
- Do not install the device in areas easily accessible to children.
- Do not install the device in a place with fire hazards or is prone to moisturizing.
- The device produces sound when it is operating. Please install the device in a place with appropriate distance at which there is no impact to daily work and life.
- Do not install the device in locations that are sealed, poorly ventilated, lacking fire protection measures, or difficult for firefighters to access.

- The device is hot when it is operating. If the device is installed indoors, please ensure good indoor ventilation and avoid significant indoor temperature rise by more than 3°C (37.4°F) while the device is operating. Otherwise, the device will be derated.
- Do not install the device in mobile scenarios such as recreational vehicles, cruise ships, and trains.
- You are advised to install the device in a location where you can easily access, install, operate, maintain it, and view the indicator status.
- Keep the device clear of vehicle passage when installed in a garage to avoid collisions.

Installation Base Requirements

- Do not install the device on a flammable base. If this cannot be avoided, add a fire barrier between the device and the base.
- The installation base should meet the load-bearing requirement. Solid brick-concrete structures, concrete walls, and floors are recommended.
- The installation base should be flat, and the installation area should meet the installation space requirements.
- No plumbing or electricity routing should be inside the installation base to avoid potential drilling hazards during device installation.
- The device base is made of aluminum. Suppose the device is installed on a metal base that is prone to electrochemical corrosion (such as high-chromium stainless steel, austenitic stainless steel, nickel-plated steel, etc.). In that case, insulation pads must be placed between the device and the base. (such as non-metallic PC insulation pads, PTFE insulation pads, PVDF insulation pads, etc.)

Tips

To ensure optimal performance of the device, it is suggested that the installation distance between the device and surrounding obstacles be planned with reference to the diagram. If the installation site is well-ventilated, the optimal solution may be deployed based on actual conditions.

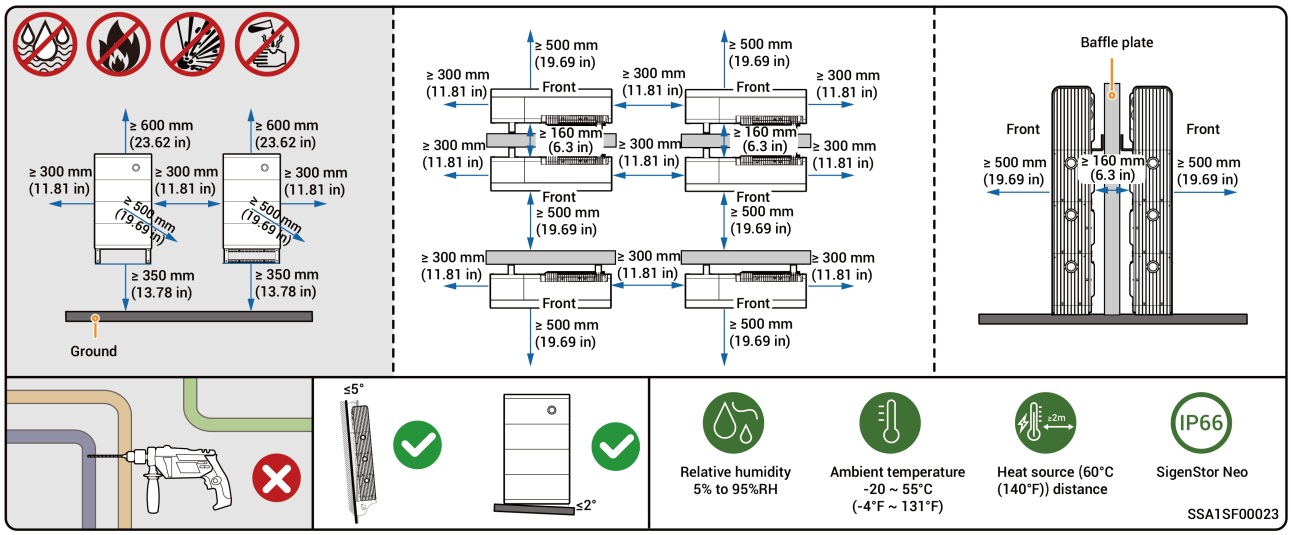

Tips

- The device supports an operating temperature range of -20°C to 55°C (-4°F to 131°F). The recommended optimal operating temperature range is 10°C to 35°C (50°F to 95°F).
- The battery pack cannot be charged immediately when the temperature is below 0°C (32°F). If there is a charging request, the battery pack will automatically start heating via the built-in heating module, and once the temperature rises above 0°C (32°F), it can charge while heating. The heating function will consume some battery power.
- When the ambient temperature is too high (single-phase: ambient temperature > 35°C (95°F); three-phase: ambient temperature > 40°C (104°F), device operation may trigger power derating, preventing the device from reaching optimal operating condition. The higher the temperature, the shorter the device's service life.

Chapter 4 Device Installation and Wiring

Device installation and wiring must only be completed by the installer certified by our company. For details on specific operating procedures, refer to the Installer Manual corresponding to the device model:

- SigenStor Neo Home Installer Manual — Single-phase System (2.5–12.0)
- SigenStor Neo Home Installer Manual — Three-phase System (3.0–15.0)

Parts and accessories supplied with the packing box are personal assets of the owner and must be kept safe.

Chapter 5 System Operation

5.1 Working Mode

Tips

The energy storage system (ESS) supports multiple working modes. The availability of Load Shedding Mode and VPP Scheduling-evergen Mode varies by country. Please refer to your app interface for availability.

Sigen AI Mode

By obtaining local peak and valley electricity prices and weather data, combined with user electricity consumption habits, the Sigen AI Mode can customize intelligent electricity usage solutions to maximize customers' cost savings.

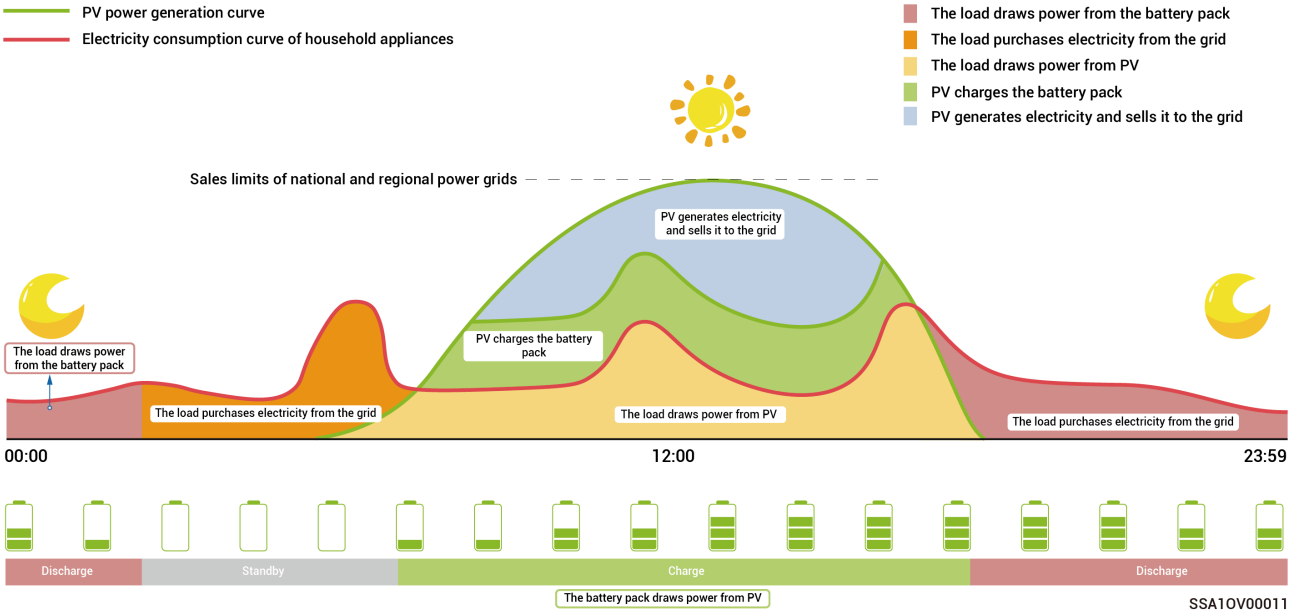

Self-Consumption Mode

- When there is sufficient solar energy, the electric energy generated by the PV system will first be supplied to the loads, the surplus electric energy will be stored in the batteries, and then the remaining energy will be sold to the grid. When there is insufficient solar power, the batteries will release electric energy to loads. By increasing the self-consumption ratio of the PV system and improving the self-sufficiency ratio of household energy, you can effectively save on your electric bills.
- This mode is suitable for areas with high electricity prices or zero-power grid connection restrictions.

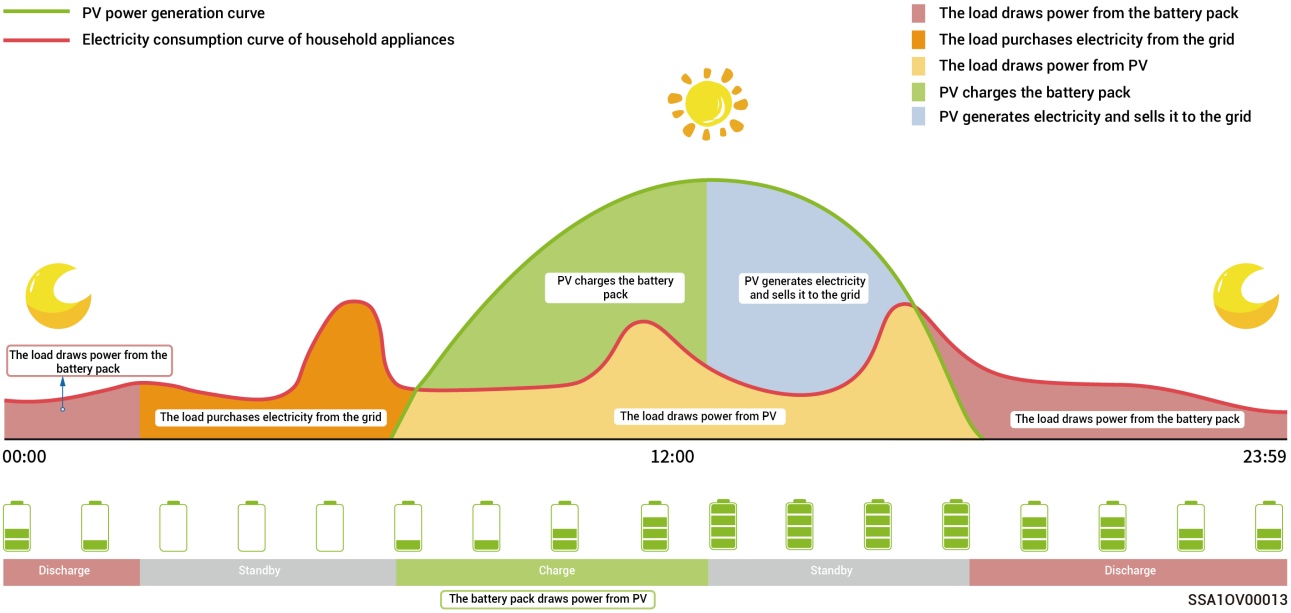

Time-based Control Mode

- The charging period, discharging period, and self-consumption period need to be set manually. When electricity prices are high, the surplus power from PV power generation and battery power can be sold to the grid, and the batteries can be charged during periods of low electricity prices to save electricity bills.
- If no time period is set, the energy storage system will be in standby mode without discharging. The PV power will prioritize supplying the load, and the surplus power will be used for charging energy storage system*.
- Up to 24 charging and discharging or self-consumption periods can be set.
- It is suitable for areas with peak and valley electricity prices and significant price differences.

* When entering this period, the battery capacity will be recorded. When the PV power is greater than the load, the remaining PV power will charge the batteries. When the PV power is less than the load, the batteries can be discharged to the load. However, when the battery capacity decreases and approaches the battery capacity value when entering this period, the batteries will stop discharging.

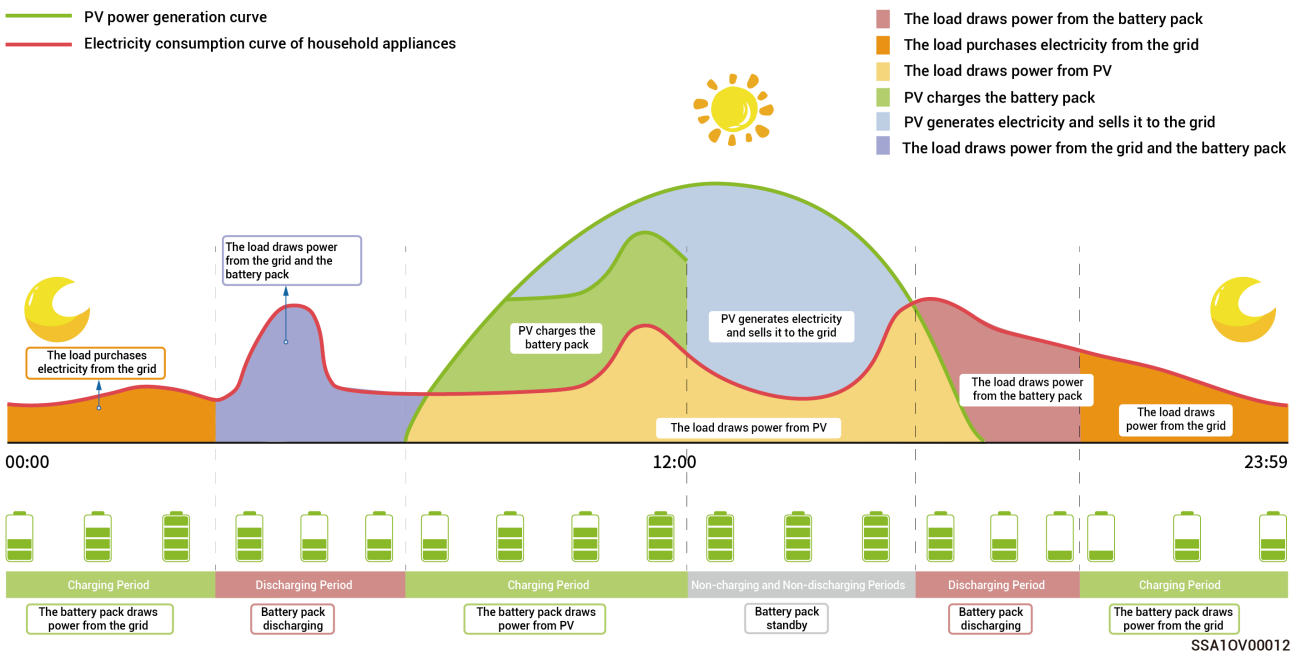

Fully Fed-in to Grid Mode

- Maximize the PV power and sell it to the grid.
- In the daytime, when the PV power is greater than the maximum output capacity of the inverter, the inverter maintains the maximum output while storing excess energy in the batteries. When the PV power is lower than the maximum output capacity of the inverter or there is no PV power in the nighttime, the batteries are discharged to ensure that the inverter maximizes the output.

Remote EMS Mode

In this mode, a third-party EMS provider is allowed to configure parameters related to the power station and products. Do not enter or exit this mode without the installer's confirmation.

Load Shedding Mode

In regions with frequent power outages, you can add your region and schedule in this mode, and the system will fully charge the batteries in advance as scheduled, ensuring that you have battery power available to supply the load during outages. (Currently only supported in South Africa)

VPP Scheduling-evergen Mode

After the owner and a third-party virtual power plant (VPP) operator complete the signing or registration process, your energy storage system will be connected to the VPP intelligent scheduling network, and the App interface will display this mode and automatically select it.

5.2 Backup Power Setup

Tips

- Skip this section if no Gateway is configured.
- Users can manually set this parameter according to the power interruption frequency of their regions and leave time.

If there is a Gateway in your system wiring, you can manually set the "Backup Reserve" value in the mySigen App. In grid connection mode, the battery stops discharging when the backup power SOC setting is reached. In the off-grid event, the battery capacity reserved for backup becomes available for use.

For example: The backup power SOC is set in Self-Consumption Mode.

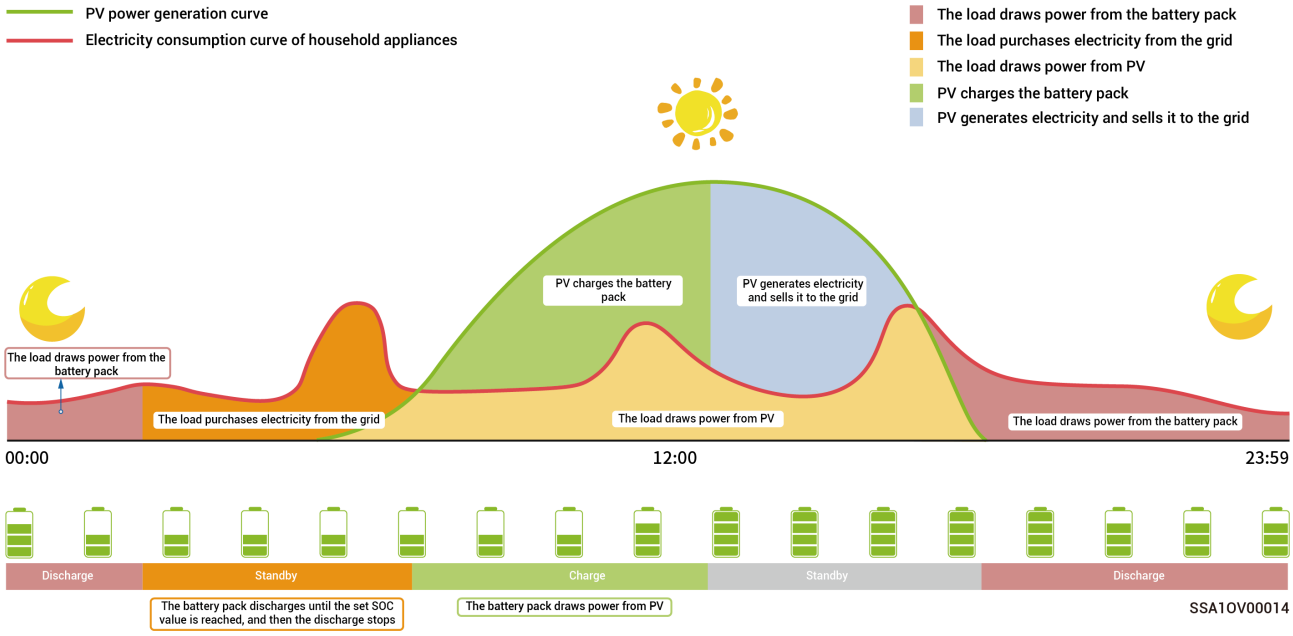

5.3 Peak Shaving

Tips

- The electricity bill in some regions is calculated as follows: Total electricity bill = Cost at peak power + Cost for electricity usage + Other costs. Wherein, peak power refers to the maximum power imported from the grid. This mode is suitable for regions with peak and valley electricity prices and significant price differences.
- The Peak Shaving function can be used with all working modes, configuring the maximum peak power drawn from the grid to reduce the maximum peak power drawn from the grid during peak periods, thereby lowering the electricity bill.

Case 1: Self-Consumption Mode Settings for Peak Shaving

Assume the Peak Shaving setting has a peak shaving SOC of 50% and a maximum peak power of 2 kW. Because the total electricity bill = Cost at peak power + Cost for electricity usage + Other costs. Wherein, peak power refers to the maximum power imported from the grid. After setting Peak Shaving in Self-Consumption, the power purchased from the grid dropped from 5 kW to 2 kW, so the total electricity bill decreases.

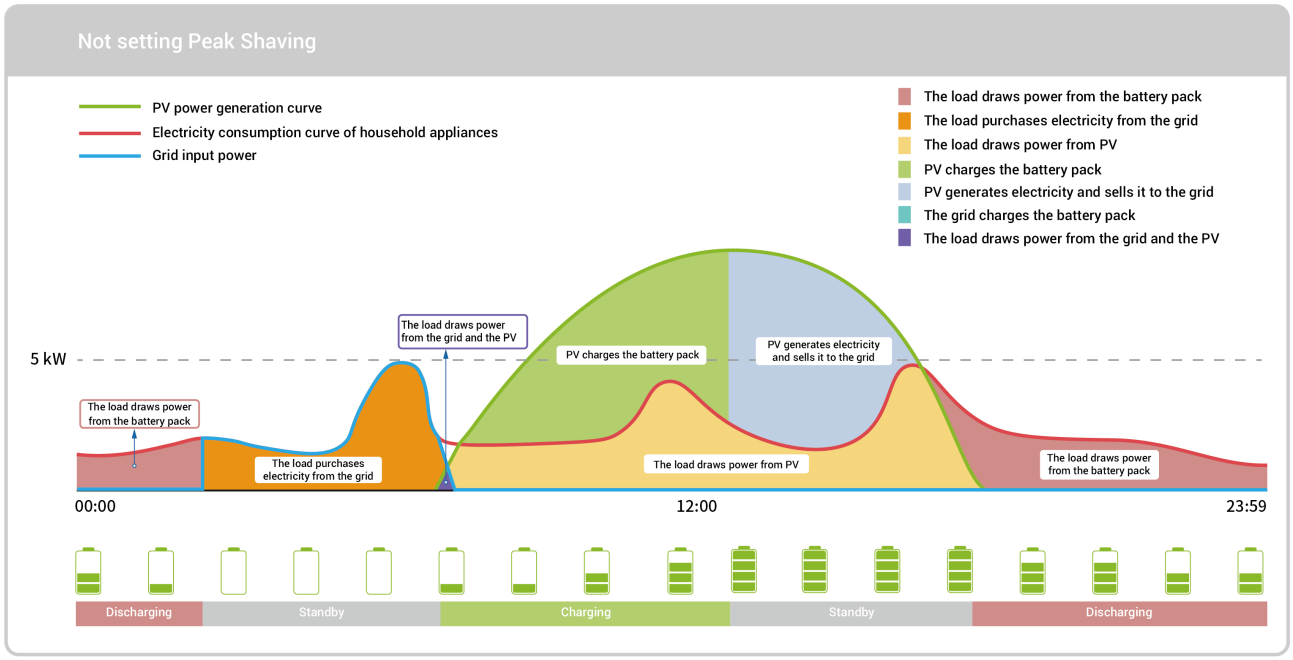

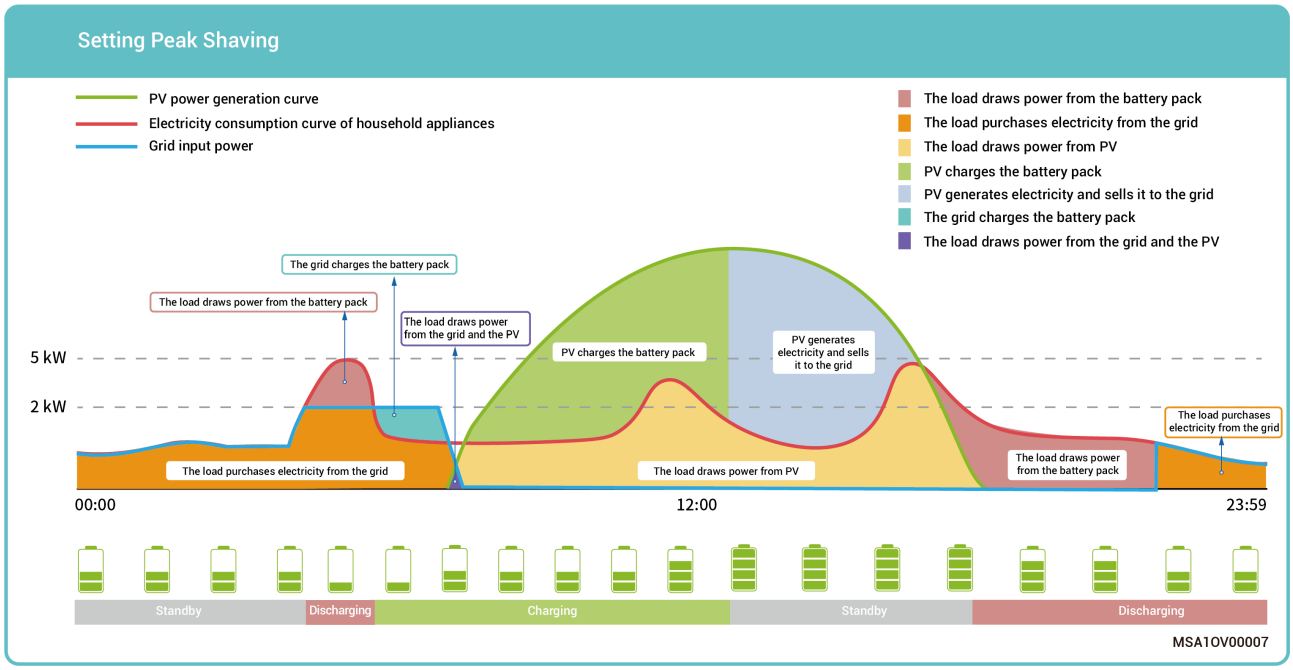

Case 2: Time-based Control Mode Settings for Peak Shaving

Assume the Peak Shaving setting has a peak shaving SOC of 50% and a maximum peak power of 2 kW. Because the total electricity bill = Cost at peak power + Cost for electricity usage + Other costs. Wherein, peak power refers to the maximum power imported from the grid. After setting Peak Shaving in Time-based Control, the power purchased from the grid drops from 5 kW to 2 kW, so the total electricity bill decreases.

Not setting Peak Shaving

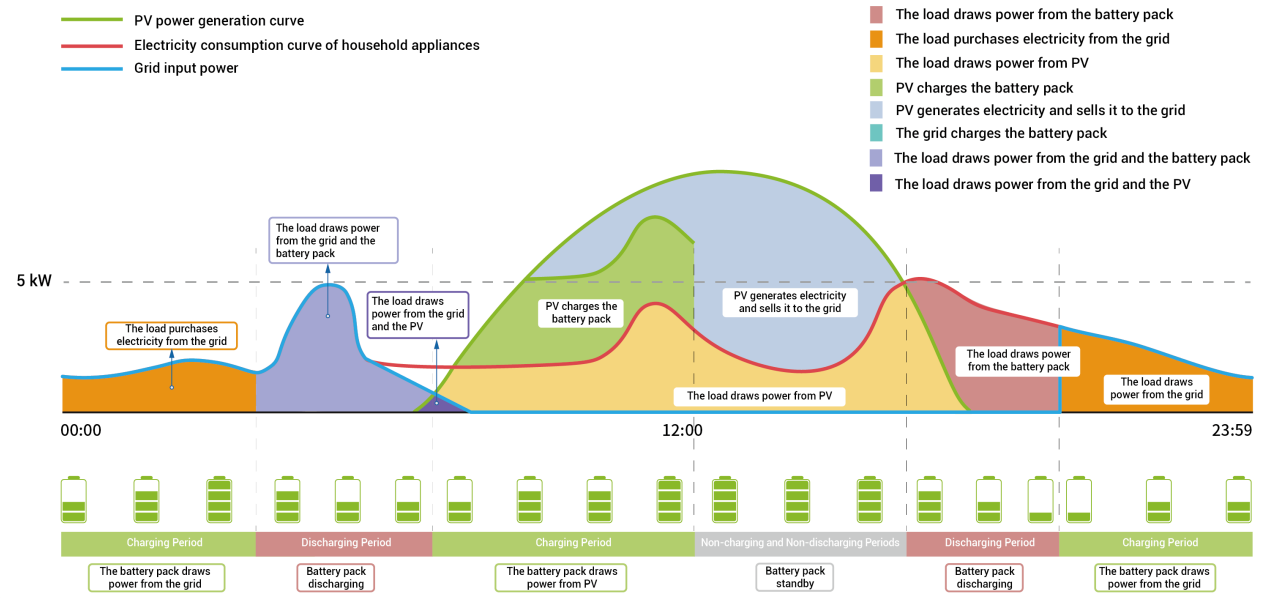

Setting Peak Shaving

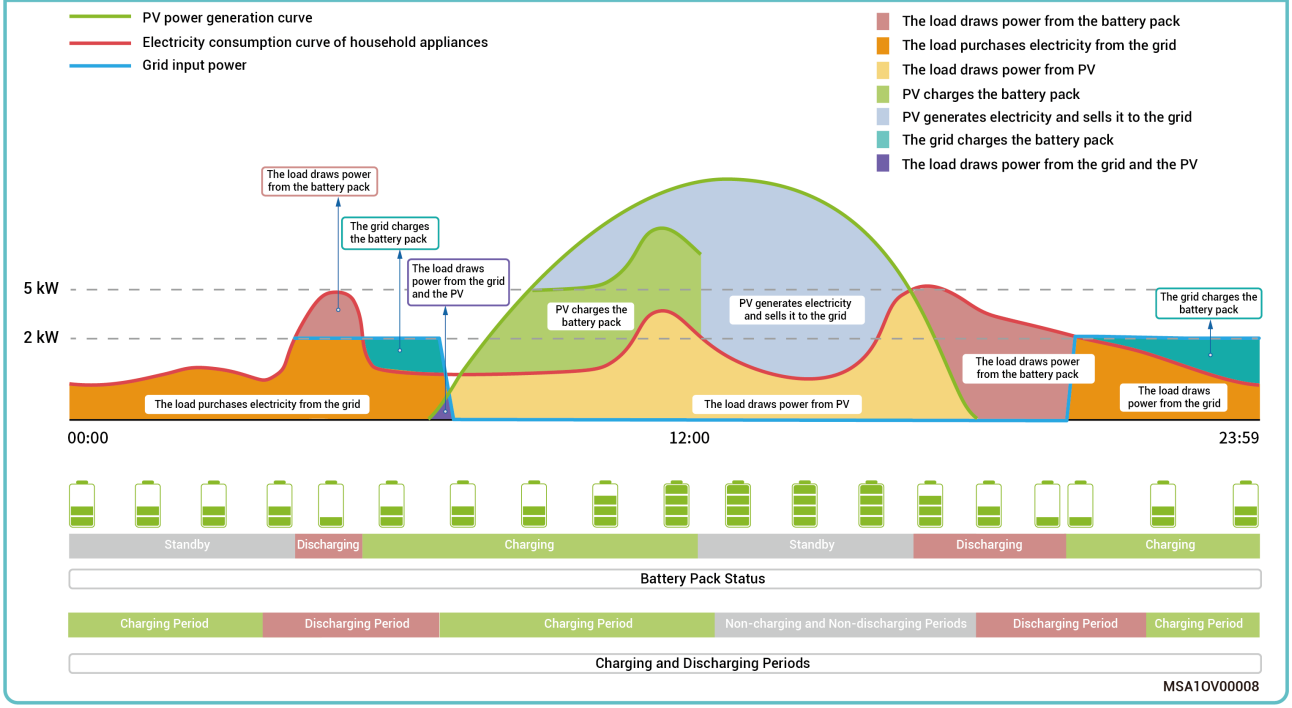

5.4 LED Indicator Status

SigenStor Neo EC Indicators

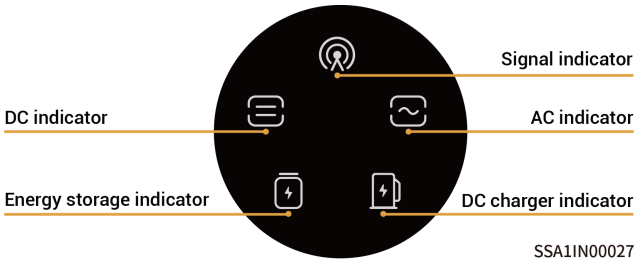

Indicator	Color	Status	Meaning
		Steady on	The DC side has been connected, but is not running.
		Steady on	The DC side is running.
		-	The DC side is not connected.
		Blink	The DC side fails.
		Steady on	The inverter fails.
		-	The AC side is not connected.
		Steady on	The AC side has been connected, but is not running.
		Steady on	Running in an on-grid state.
		Steady on	Running in an off-grid state.
		Blink	Running with overload in an off-grid state.
		Blink	The AC side fails.
		Steady on	The inverter fails.
		Steady on	All SigenStor Neo BATs have been connected, but are not running.
		Blink	SigenStor Neo BAT charging.
		Blink	SigenStor Neo BAT discharging.
		-	All SigenStor Neo BATs are sleeping.
		Blink	Some of SigenStor Neo BATs are faulty.
		Steady on	All SigenStor Neo BATs fail.
		-	The management system is not connected.
		Blink	The app is being connected to the hotspot of the device.

Indicator	Color	Status	Meaning
		Steady on	The management system has been connected via FE or WLAN.
		Steady on	The management system has been connected via 4G.
		Blink	Insufficient traffic for Sigen CommMod.
		-	Reserved

CommMod Indicators

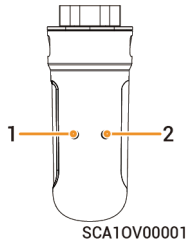

No.	Name	Status	Description
1	Power indicator	-	-
2	Network status indicator	● Slow flashing (200 ms on/1800 ms off) ● Slow flashing (1800 ms on/200 ms off) ● Quick flashing (125 ms on/125 ms off)	● Connecting to the network. ● On standby. ● Data transfer in progress.

5.5 mySigen App — Query and Settings

The app can be downloaded in the following two methods. For details, please refer to *mySigen App User Manual*.

Chapter 6 System Maintenance

6.1 Routine Maintenance

To ensure long-term optimal operation of the device, it is recommended to perform routine maintenance as described in this chapter.

Inspection Item	Inspection Method	Power Off or Not	Maintenance Interval
System cleaning	Regularly check whether the decorative cover or fan is covered and dirty. Clean it up when necessary. Do not use tools that may cause electric shock or with damaged insulation when cleaning up, such as wire brushes.	Yes	Once every 3 months
System operating status	● Check whether the equipment appearance is damaged or deformed. ● Check for noise when the device is operating. ● When the device is operating, check whether the device parameters are correctly set.	No	Once every 6 months.
System Maintenance	Check regularly whether the AC terminal gland and the communication port gland are loose.	No	Once every 6 months.

6.2 Device Power-on/Power-off

Tips

- To prevent the device from failing to start due to battery discharge to the cutoff SOC in a pure off-grid state (no DC-coupled PV, only AC-coupled third-party PV or charging devices), you can preconfigure "Off-Grid Settings" in the mySigen App to reserve SOC for the device's next-day startup. For detailed steps, please refer to the System Settings section in the mySigen App Installer Manual.
- Black start: In pure off-grid scenarios, the device relies solely on battery power to start.
- After enabling "Enable 3rd Party PV Inverter Black Start" in the mySigen App, if the system is off and the next day has sufficient sunlight and the device has PV power but fails to auto-start at preset time points (e.g., 8:00, 10:00, 12:00, 14:00), you can manually long press the ON/OFF black start button for ≥ 3 seconds to start the device. In DC-coupled PV off-grid scenarios (configured with PV and a charging device), the device will automatically power on after PV charging brings the battery to a specified SOC; do not press the ON/OFF black start button manually.

Option 1: App Operation

Tap Setting in the mySigen App to power on/off the device.

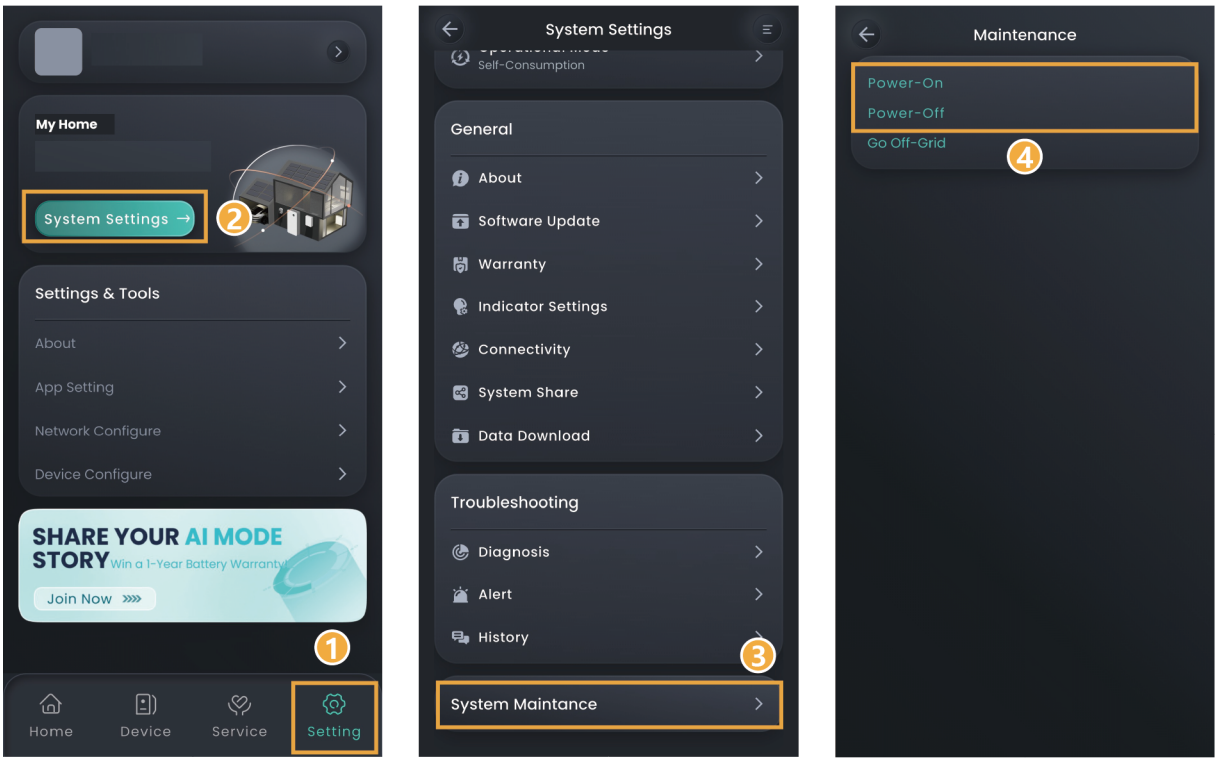

MSA1CM00071

Option 2: Manual Operation

Remove the decorative cover as shown and press the power ON/OFF button.

Tips

The long-press duration should be between 3 s and 30 s to power on/off the device. Allow more than 10 s between powering on and off the device.

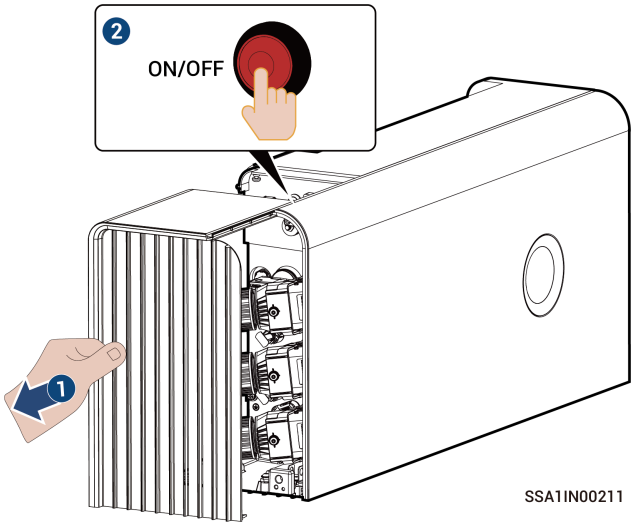

Tips

Major firmware upgrades can fail if the device is not connected to the internet for an extended period of time. When your device is not connected to the internet, the system issues periodic notifications. If the disconnection persists beyond 90 consecutive days, the system will automatically engage in safe running mode for safety compliance. Reconnect to the internet immediately. For unresolved issues, feel free to contact us.

6.3 Operating with Low Battery

Due to the battery pack's self-discharge characteristics, power loss can occur. If the device is left uncharged for an extended period, overdischarge may occur and damage the device. Recharge the device promptly when it is at low charge.
Under normal conditions, the device can recharge itself as operating conditions allow. If the device cannot charge, contact your installer or sales representative promptly and resolve the issue within the specified time frames. If battery capacity loss or irreversible damage results from exceeding those time limits, our company is not responsible.

- Recharge within 30 days when the battery level is ≥ 10%
- Recharge within 7 days when 0% ≤ battery level< 10%

Possible Scenarios That May Prevent Charging (Including but Not Limited to):

- No PV input, and the grid side has prolonged power loss.
- Device failure.
- Parameters are not set correctly.

6.4 Emergency Measures

Fire Emergency Measures

Danger

- Shut down the device or cut off the mains switch if it is safe to do so.
- High temperatures can deform or damage the battery pack, causing the electrolyte to leak and even release toxic gases. Do not approach; wear personal protective equipment.
- If the fire is small, use a carbon dioxide or ABC dry powder fire extinguisher to extinguish the fire.
- If the fire is spreading, evacuate from the building or device area immediately and call the fire department. Do not go back inside the building.
- Do not expose firefighters to high-voltage components during firefighting. Otherwise, the risk of electric shock may exist.
- After extinguishing the fire, do not use the device. Contact your sales representative.

Flood Emergency Measures

Danger

- Shut down the device or cut off the mains switch if it is safe to do so.
- Do not touch the battery pack if it is submerged to avoid electric shock.
- After flooding subsides, do not use the device. Contact your sales representative.

Emergency Measures for Battery Pack Abnormalities

Danger

- If the battery pack emits abnormal odors, leaks electrolyte, overheats, or shows other abnormalities, do not approach or touch it; contact professionals immediately to handle it. Professionals must wear goggles, rubber gloves, gas masks, protective clothing, and other personal protective equipment to protect themselves.
- Electrolyte is corrosive. Contact may cause skin irritation or chemical burns. If you accidentally come into contact with the electrolyte, immediately take the following measures:
  - Inhalation: Evacuate the contaminated area, maintain fresh air circulation, and seek medical attention immediately.
  - Eye contact: Flush eyes with plenty of water for ≥ 15 minutes; do not rub; seek medical attention immediately.
  - Skin contact: Wash the affected area with plenty of soap and water, and seek medical attention immediately.
  - Ingestion: Induce vomiting, and seek medical attention immediately.
- Do not continue to use abnormal battery packs. Contact your sales representative.

Emergency Measures for Battery Pack Drop or Impact

- If you notice a strong odor, smoke, fire, or similar, move away from the device immediately and contact professionals to handle it.
- Do not use the battery pack after it has been dropped or impacted. Contact your sales representative.

6.5 Alarm List

For detailed content, please refer to Alarm List.

Chapter 7 Appendix

7.1 Technical Parameters

For more information on the parameters of the device, please refer to the respective Datasheets.

7.2 Compliance Statements

Warning

This product may expose you to lead and other chemicals that the State of California has identified as causing cancer, birth defects, or other reproductive harm. For more information, please visit: www.P65Warnings.ca.gov.