KD SOLAR™
SOLAR MOUNTING SYSTEMS
A Brand by Kenani Designs (Pty) Ltd

KDS-CB220-SR

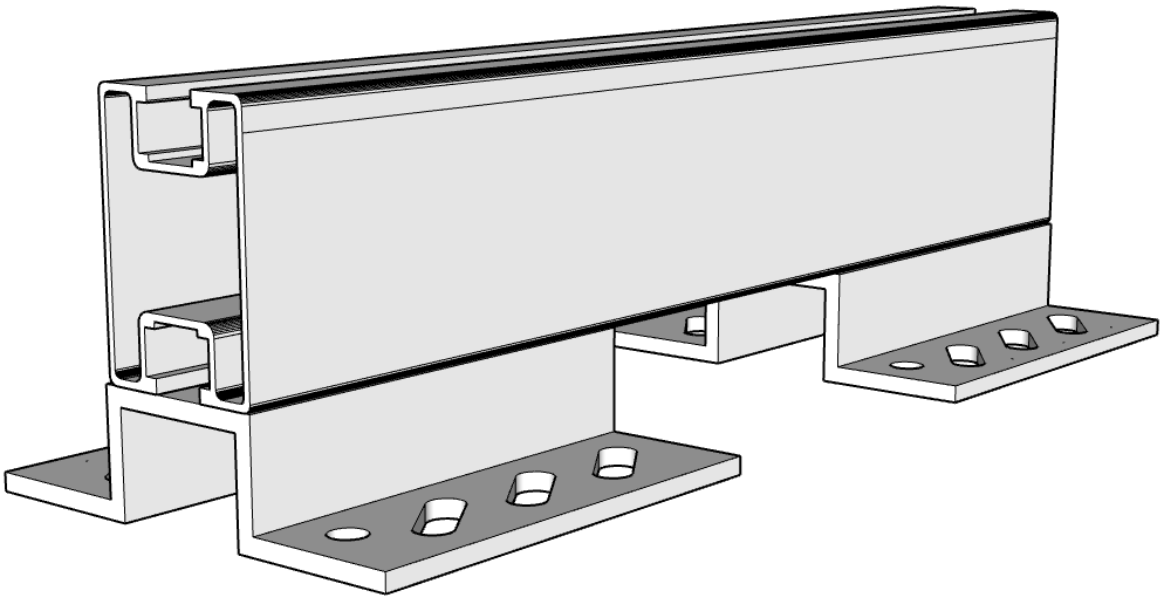

Item Code:	**KDS-CB220-SR**
Series Name:	**SR RANGE**
Item Description:	**CHANNEL BRACKET WITH 220mm SHORT RAIL**
Weight:	**314g**
Material Specification:	**ALUMINIUM**
Penetrating/Non-Penetrating:	**PENETRATING**
Product Guarantee:	**25 YEARS**
Included Components:	**CLASS4-SPSCREW-5.5X25 / CLASS3-STITCH-14X22**
Panel Orientation:	**PORTRAIT**
Additional items needed:	**KDS-MC35-40P; KDS-EC30-40P**
Tooling Required:	**5/16 NUTT SETTER, 7mm ALLEN KEY**

PV Module Compatibility

PV Module Thickness:	**30mm-40mm**
PV Module Size:	**Unlimited**
PV Module Type:	**Alu Framed PV Modules**